People's Democratic Republic of Algeria Ministry of Higher Education and Scientific Research
University of Mostaganem Faculty of Science and Technology
Department of Mechanical Engineering

BASIC TECHNOLOGY



Specialty: 2nd Year Mechanical Engineering

Presented by: **Dr. Imène HEBBAR**

Expertised by:

Mr. Ramdane ZENASNI	Professor	University of MOSTAGANEM
Mr. Ali DJEFFAL	Associate Professor class A	University of SIDI BEL ABBES

2026-2027

ABSTRACT

This course, entitled *Basic Technologies*, is designed for second-year undergraduate students in Mechanical Engineering. It provides fundamental knowledge of engineering materials, manufacturing processes, and assembly techniques. The course begins with an introduction to materials, their classification, properties, and applications in mechanical engineering. It then examines the main shaping processes used in manufacturing mechanical components, including processes without material removal, such as casting and forming, and processes involving material removal, particularly conventional machining. Finally, it presents different assembly techniques, distinguishing between permanent and removable joining methods. Through this course, students will develop a basic understanding of manufacturing principles, identify suitable production methods, and acquire essential knowledge for analyzing and understanding the technological processes involved in mechanical part production.

Key Words: Materials – Shaping Processes – Machining – Casting – Forming – Assembly Techniques.

RÉSUMÉ

Ce cours, intitulé Technologies de base (Basic Technologies), est destiné aux étudiants de deuxième année de Licence en Génie mécanique. Il a pour objectif de leur apporter les connaissances fondamentales relatives aux matériaux, aux procédés de fabrication et aux techniques d'assemblage utilisés dans le domaine de la construction mécanique.

Dans un premier temps, le cours présente les différentes familles de matériaux, leur classification, leurs propriétés et leurs principales applications en génie mécanique. Il aborde ensuite les principaux procédés de fabrication et de mise en forme des pièces mécaniques, en distinguant les procédés sans enlèvement de matière, notamment la fonderie et la mise en forme par déformation, des procédés avec enlèvement de matière, en particulier l'usinage conventionnel. Enfin, il traite des différentes techniques d'assemblage en mettant en évidence la distinction entre les assemblages permanents et les assemblages démontables.

À l'issue de ce cours, les étudiants seront capables d'identifier les principaux procédés de fabrication, de comprendre leurs principes de fonctionnement et de sélectionner les méthodes de production adaptées aux exigences technologiques des pièces mécaniques.

Mots-clés : Matériaux – Procédés de fabrication – Mise en forme – Usinage – Fonderie – Déformation plastique – Techniques d'assemblage.

الملخص

يهدف هذا المقياس، المعنون بـ التكنولوجيات الأساسية(Basic Technologies) ، إلى طلبة السنة الثانية ليسانس تخصص الهندسة الميكانيكية، ويُعنى بتزويدهم بالمعارف الأساسية المتعلقة بالمواد الهندسية وعمليات التصنيع وتقنيات التجميع المعتمدة في مجال الهندسة الميكانيكية.

يتناول المقياس في البداية مدخلًا عامًا حول المواد الهندسية، يشمل تصنيفها وخصائصها ومجالات تطبيقها في الهندسة الميكانيكية. ثم يستعرض أهم عمليات تشكيل وتصنيع الأجزاء الميكانيكية، مع التمييز بين العمليات التي لا تتضمن إزالة المادة، مثل السباكة والتشكيل، والعمليات التي تعتمد على إزالة المادة، وخاصة عمليات التشغيل التقليدية.(Usinage conventionnel)

كما يتطرق المقياس إلى مختلف تقنيات التجميع، مع التمييز بين طرق الربط الدائم وطرق الربط القابلة للفك.

ويهدف هذا المقياس في مجمله إلى تمكين الطلبة من فهم المبادئ الأساسية لعمليات التصنيع، والتعرف على طرق الإنتاج المناسبة، واكتساب المعارف والمهارات الضرورية لتحليل وفهم مختلف المراحل والعمليات التكنولوجية المستخدمة في إنتاج وتصنيع القطع الميكانيكية.

الكلمات المفتاحية :المواد الهندسية – عمليات التصنيع – عمليات التشكيل – التشغيل – السباكة – التشكيل – تقنيات التجميع – الهندسة الميكانيكية.

Foreword

This document is a teaching resource dedicated to the course "**Basic Technologies**." It is specifically designed for **second-year** undergraduate students in Mechanical Engineering.

Developed in accordance with the current ministerial framework, this course aims to provide a comprehensive and technical overview of the various methods of shaping materials. The pedagogical progression is structured around three fundamental areas:

1. General Information on Materials: Definitions and essential properties necessary for understanding manufacturing constraints.
2. Shaping Processes: Detailed study of part production techniques, including processes without material removal (casting, forming, etc.) and processes with material removal (conventional machining).
3. Assembly Techniques: Presentation of permanent and removable joining methods.

TABLE OF CONTENTS

CHAPTER 1 : Materials

1.	Introduction	1
2.	Metals, alloys, and their designations:	1
2.1.	Pure Metals	3
2.2.	Alloy	3
2.3.	Structure of Metals and Alloys	4
3.	Ferrous Metals and Their Alloys	4
3.1.	The Iron-Carbon Alloy:	4
3.1.1.	Iron (The Base Metal)	4
3.1.2.	Carbon (The Essential Alloying Element)	5
3.1.3.	Additions	5
4.	Selection Criteria	6
5.	Mechanical Tests And Characteristics	6
5.1.	Material Characterization Test	6
5.1.1.	Tensile Test AFNOR Standard A 03-151	6
5.1.2.	Interpretation Of The Diagram	6
6.	Steels	8
7.	Cast iron	9
8.	Non-ferrous alloys	11
8.1.	Aluminum alloys	11
8.2.	Casting alloys:	12
8.3.	Copper Alloys:	12
8.4.	Zinc Alloys	13
8.5.	Nickel AlloysPure	13
8.6.	Titanium Alloys	13
8.7.	Magnesium Alloys	14
9.	Composite Material	15
10.	Plastic Materials	16

CHAPTER 2: Processes for obtaining parts without material removal

1.	The molding	17
1.1.	Molding techniques	18

1.1.1. with permanent molds 18
1.1.2. with single use molds 19
2. The bending 19
3. Spinning on a lathe 20
4. Rolling 21
5. Wire drawing 21
6. Cutting 23
6.1. Deep drawing 23
6.2. Waterjet cutting 23
6.3. Laser cutting 24
7. Bending 26
8. Sintering and powder metallurgy 26
9. Forging 27
9.1. Manual forging 27
9.2. Die forging and stamping 27

CHAPTER 3: Processes for obtaining parts by material removal

1. Introduction 29
2. Drilling 29
3. Sawing 30
3.1 The hacksaw 30
3.2 The band saw 31
3.3 Hacksaws 31
4. Filing 31
5. Turning 33
5.1. Turning Operations 34
5.1.1. Turning 34
5.1.2. Facing 34
5.1.3. Grooving 34
5.1.4. Chamfering 34
5.1.5. Parting-Off 34
5.1.6. Threading 34
5.1.7. Drilling 34
5.1.8. Boring (Alésage) 34

6.	Milling	35
6.1	Milling Operations	36
7.	Planing	37
7.1.	The Shaper	38
7.2.	The Planer	38
8.	Grinding	38

CHAPTER 4: Assembly Techniques

1.	Introduction	40
2.	Degree of Constraint	40
3.	Assembly Typology	40
3.1	Permanent Assembly	40
3.2	Non-Permanent Assembly	40
3.3	Direct Assembly	40
3.4	Indirect Assembly	40
4.	Assembly Methodologies: Exemplary Cases	41
4.1.	Welding	41
4.1.1.	Heterogeneous Welding (Brazing & Soldering)	41
4.1.2.	Autogenous Welding	42
4.1.3.	Exemplary Processes	43
4.1.3.1	Aluminothermy (Thermite Welding)	43
4.1.3.2	Oxy-Fuel Welding (Gas Combustion)	43
4.1.3.3	Electric Arc Welding	44
4.2.	Riveting	44
4.3.	Press-Fit Assembly	45
4.4.	Self-Locking	45
4.5.	Tapered Interference Fit	46
4.6.	Threaded Fasteners: Screws and Bolts	46
4.6.1	Bolted Joints	46
4.6.2	Lead Screw and Nut Assembly	47
4.7.	Studs	48
4.8.	Keying	48
4.9.	Mechanical Clinching	49
4.10.	Shrink Fitting	50

4.11.	Snap-Fit Assembly	50
4.12.	Mortise and Tenon Joint	50
4.13.	Crimping	51
5.	Polymer extrusion	53

References

1. Introduction

The trajectory of technological development has been fundamentally driven by the evolution of engineering materials, spanning from the initial reliance on stone to the later incorporation of clay and, crucially, metals such as bronze and iron.

While metals remain indispensable across a broad spectrum of modern applications (e.g., mechanical components and industrial equipment), pure metallic elements often present limitations regarding optimal performance characteristics and economic viability. The strategic adoption of alloys emerged as a historical necessity, with evidence of their use dating back to the 15th century, serving to overcome these inherent constraints.

The last century has witnessed a substantial amplification of material diversification, marked by the introduction and rapid growth of organic compounds, advanced technical ceramics, and sophisticated composite materials. This material revolution has demonstrably contributed to enhancing product quality while simultaneously achieving reductions in component weight and manufacturing cost.

Despite this expansion, traditional ferrous materials—namely steel and cast iron—continue to hold a dominant position as the most widely utilized metallic materials in contemporary industrial practice.



Fig.1 steel and cast iron

2. Metals, alloys, and their designations:

The term metal encompasses both a chemical element—characterized by defining properties such as high thermal and electrical conductivity, metallic luster, and plasticity—and a shaped material engineered for a specific industrial application.

In practical industry, pure metals are rarely used because their inherent properties are often

insufficient to meet performance demands. The intentional creation of an alloy—achieved through the measured addition of one or more secondary elements (whether metallic or metalloid) to a pure base metal—is the established method for profoundly modifying and enhancing these properties.

Alloys are systematically classified based on the number of constituent elements they contain:

- Binary alloys comprise two elements.
- Ternary alloys comprise three elements.
- Quaternary alloys comprise four elements.



Fig.2 Metals, alloys

Metallic materials fundamentally comprise metallic bonds, which are established through a shared lattice of partially delocalized electrons. These delocalized electrons are directly responsible for conferring excellent thermal and electrical conductivity properties upon the materials. Physically, metals are typically either paramagnetic or ferromagnetic, and generally exhibit high melting and vaporization temperatures.

In terms of mechanical behavior, metals are characteristically ductile and relatively tough. This combined toughness and ductility is a major advantage for various forming processes. Furthermore, the mechanical strength of metallic alloys can be significantly enhanced post-forming through appropriate heat treatments, achieved by promoting the precipitation of hardening phases (known as structural hardening).

However, the inherent plasticity of metals can render their fatigue resistance problematic. They are also frequently susceptible to corrosion. Finally, a key limitation is their high density, which often results in heavy materials, posing a constraint in applications where mass reduction is critical.



Fig.3 Metallic solids

2.1.Pure Metals

A pure metal is theoretically defined as a metallic element entirely devoid of impurities, possessing a 100% purity of a single atomic species. In practice, however, absolute 100% purity is unattainable. Instead, purity levels are measured by high concentration percentages, such as 99.9% for nickel, 99.99% for copper, and exceptionally high levels like 99.998% for aluminum.From a chemical and geological perspective, metals constitute approximately two-thirds of the elements listed in the periodic table and account for an estimated 24% of the planet's mass. Fundamentally, the key characteristic that distinguishes metals from non-metals lies in their characteristic interatomic bonding.

2.2.Alloys

An alloy is scientifically defined as a material created when a pure base metal is intentionally mixed with one or more additional elements. The classification of the resulting alloy is determined by the total number of constituents it contains:

- Binary alloys contain two elements.
- Ternary alloys contain three elements.
- Quaternary alloys contain four elements.

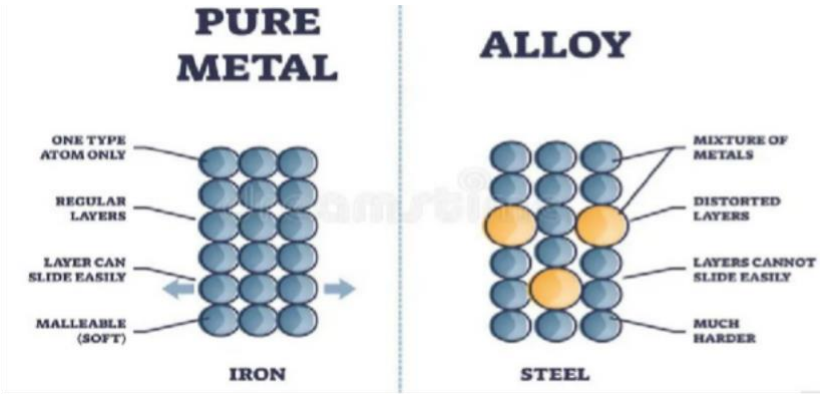

Fig.4 Pure Metals, ALLOY

2.3. Structure of Metals and Alloys

The study of metals and alloys reveals that these materials possess a defined internal organization, commonly referred to as their structure. Consistent with most solid materials, the majority of pure metals exhibit primary crystal structures, notably the cubic (Body-Centered Cubic—BCC, and Face-Centered Cubic—FCC) and hexagonal (Hexagonal Close-Packed—HCP) lattice types.

The alloys utilized in engineering are created through the crystallization of two or more constituent metals, occasionally incorporating inclusions of non-metallic elements.

Consequently, a complex alloy system typically comprises several distinct solid phases. A phase is formally defined as a region within the system that is structurally homogeneous and separated from other regions by a defined physical boundary. Each identified phase possesses its own unique crystal structure and associated properties, which collectively dictate the bulk behavior of the alloy.

Alloys are broadly categorized into two major classes based on their primary constituent:

- **Ferrous alloys** (those primarily containing iron).
- **Non-ferrous alloys** (those not primarily based on iron).



Fig.5 Alloys, metals

3. Ferrous Metals and Their Alloys

3.1. The Iron-Carbon Alloy:

3.1.1. Iron (The Base Metal)

Iron serves as the least expensive base metal and is fundamental to ferrous alloys. It exhibits three distinct allotropic phases determined by temperature, each possessing a unique crystal

structure:

1. alpha-Iron (Ferrite): This phase is stable up to 906 ˚C and is characterized by a Body-Centered Cubic (BCC) crystal structure.
2. gamma-Iron (Austenite): This phase is stable within the temperature range of 906 ˚C and 1400 ˚C, adopting a Face-Centered Cubic (FCC) crystal structure.
3. delta-Iron: This high-temperature phase is stable between 1400 ˚C and 1528 ˚C, reverting to a Body-Centered Cubic (BCC) structure.

3.1.2. Carbon (The Essential Alloying Element)

Carbon is the crucial secondary component, after iron, in the composition of both steels and cast irons. Carbon has an exceptionally high melting point of 3,500 ˚C and exists in several allotropic varieties, including graphite, diamond, and lampblack. Its strategic inclusion profoundly dictates the final mechanical properties of the resulting ferrous alloys.

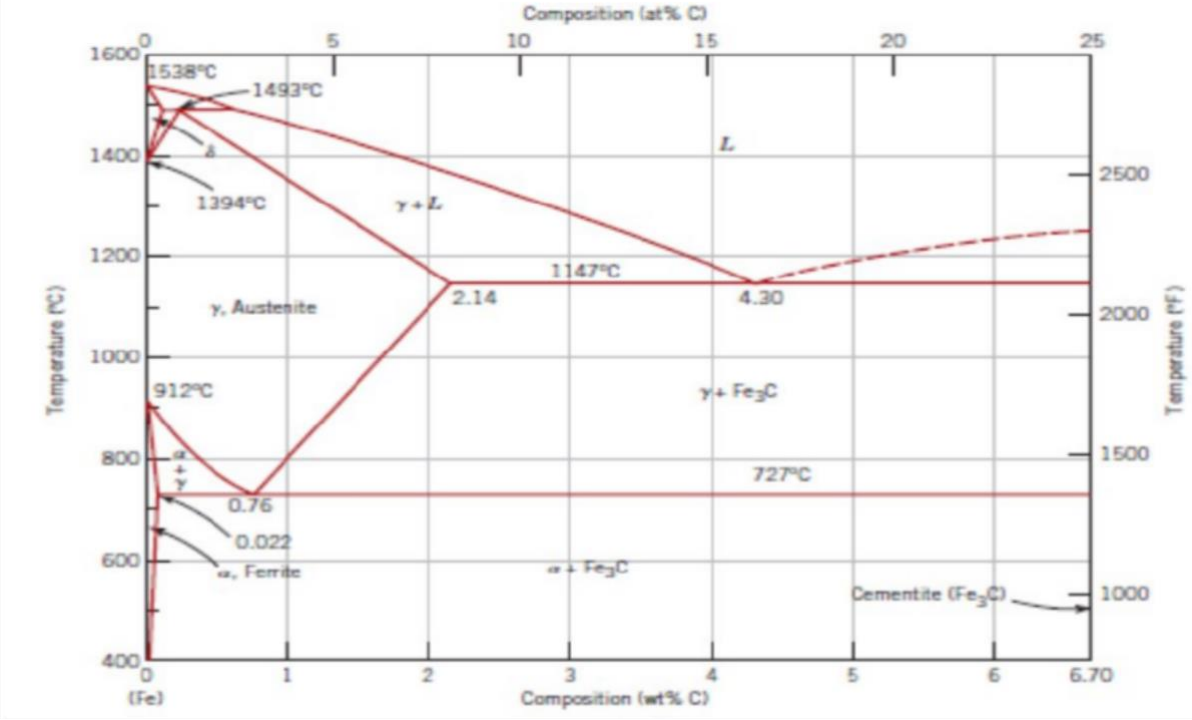

Fig.6 Fer-Carbonne diagramme

3.1.3. Additions

The primary objective of introducing alloying additions to an iron-carbon system is to systematically modify and enhance its intrinsic characteristics. The resulting property changes are critically dependent upon both the specific elements introduced and their precise concentration percentages.

Common examples of such alloying elements include Nickel, Manganese, Molybdenum,

Cobalt, Chromium, Silicon, Phosphorus, Tungsten, Titanium, and Vanadium.

Specific additions yield targeted effects:

- Aluminum provides a slight increase in material hardness.
- Chromium significantly improves resistance to corrosion and oxidation.
- Lead is utilized to enhance machinability.
- Conversely, Sulfur is typically classified as an undesirable impurity.

4. Selection Criteria

The criteria for selecting a raw material for mechanical construction are numerous and difficult to structure.

- Mechanical properties: tensile strength, fatigue resistance, surface hardness, etc.

Shape and dimensions of the parts to be obtained: thin sheets, machined shapes, simple raw shapes

- Physical properties: electrical and thermal conductivity, density Cost price depends on the size of the production run
- Chemical properties: corrosion resistance, surface coatings, bonding properties

5. Mechanical Tests And Characteristics

Mechanical tests are used to evaluate the mechanical properties of the materials used.

They are performed either: directly on the parts or on test specimens – samples of the material in question.

5.1. Material Characterization Test

5.1.1. Tensile Test AFNOR Standard A 03-151

The test consists of subjecting a specimen of defined shape (initial length, L0; initial cross-section, S0) to an increasing tensile force directed along its axis.

A mechanical device records a curve that gives, at each instant, the total load F as a function of the specimen's elongation ΔL.

5.1.2. Interpretation Of The Diagram

F=f(ΔL) Figure 1 represents this diagram for mild steel.

The test procedure can be followed until the specimen breaks at point S. From O to E, the phenomenon is reversible; that is, if the test is interrupted before E and the tensile force is gradually reduced, a return curve is obtained that perfectly overlaps the curve described initially. For increasing loads, when all force is removed, the metal has returned to its original dimensions: it had therefore only undergone temporary deformations and had not exceeded its

elastic limit. Furthermore, the OE section is essentially straight. The quotient Δ defines the apparent yield strength (Re).

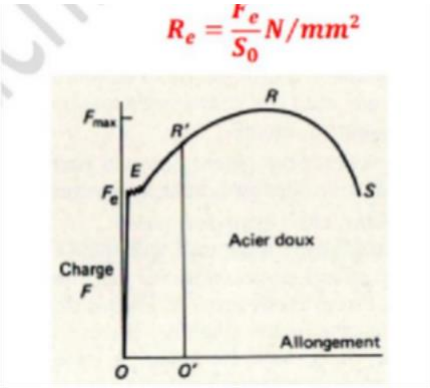

Fig. 7 Diagram of a tensile test on a steel bar

From point E onwards, the elongations, ceasing to be temporary, become permanent. We observe that the total load F continues to increase, but much more slowly than at the beginning, up to a value Fmax corresponding to the maximum R. By convention, the tensile strength R is given by the following relationship:

$$R = \frac{F_{max}}{S_0} \quad N/mm^2 \tag{1}$$

Beyond R, the phenomenon of necking begins (decrease in the diameter of the specimen) and, atthe same time, the overall load required to produce the elongation decreases until S, wherethe specimen breaks. The percentage elongation after breakage is given by the relation:

$$A = \frac{L_U - L_0}{L_0} \times 100 \tag{2}$$

Ultimate elongation between reference points, measured after bringing the two fragments of the broken specimen together.
The percentage necking coefficient (Z) is defined by the following relationship:

$$Z = \frac{S_0 - S_U}{S_0} \times 100 \quad (3)$$

(Ultimate section, in square millimeters, in the region of rupture) d) Remarks.

— From point E, the metal enters the plasticity zone; it is said to bework-hardened.

If the test is interrupted at a point R' between E and R by progressively decreasing the load, the representative point describes a straight line R' O' substantially parallel to the line OE, and when the load is again zero, the specimen has retained a permanent elongation OO'.

6. Steels

For industrial reasons, the standard (NF) has adopted two groups of designations:

Group 1: Non-Alloy Steels for General Purpose and Engineering

This group encompasses non-alloy steels designated by the letters S (Structural Steel) and E (Engineering Steel, formerly designated A). These materials are intended for general purpose applications and standard mechanical engineering components, often serving as feedstock for further shaping processes (e.g., wire, sheets, etc.).

The primary designation is defined by the letter followed by a number indicating the minimum guaranteed yield strength in MPa(N/mm^2).

- Example: S240 denotes an engineering steel with a minimum yield strength $R_{\{eH\}}$ of 240 MPa.

Other specialized designations within this category include H, P, D, L, B, and Y.

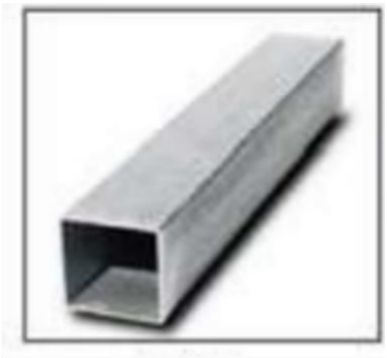

Fig. 8 steel

Cast Steel Designation

When the material is produced via casting (Cast Steel), the designation is prefixed with the

letter **G**.

• **Example: GS 200** or **GE 240**. **Group 2:**

We will distinguish 3 cases:

1- Unalloyed steels C (formerly XC): the percentage of manganese isless than 1% (the carbon content is multiplied by 100).

Example: C32A cast steel will be preceded by the letter G. Example: GC32

2- Low-alloy steels: The manganese content is greater than 1% andno alloying element may exceed 5% by mass.

Example: 32CrMo4-2 (the value 32 represents the percentage of carbon multiplied by 100, CrMo are chemical symbols of the alloying elements placedin descending order, the values 4-2 indicate the % mass content of the alloying elementsfrom the first symbol, this value being multiplied by a factorgiven. See table).

Table 1: Multiplication factors of the different addition elements

Alloying Elements	Multiplying Factor
Cr, Co, Mn, Si, W	4
Al, Be, Cu, Mo, Nb, Pb, Ta, Ti, V, Zr	10
Ce, N, P, S	100
B	1000

High-alloy steels:

Those with an alloy content of at least one element of 5% or higher (this category includes two subgroups: high-alloy steels and high-speed steels). The designation begins with the letter X followed by the same designation as for low-alloy steels.

Examples: X 8 Cr Ni 18-9 (X indicates that the alloy is a high-alloy steel).

HS 7-4-2-5 (HS indicates that the alloy is a high-speed steel; 7 represents the percentage of tungsten, 4 the percentage of molybdenum, 2 the percentage of vanadium, and 5 the percentage of cobalt).



Fig. 9 High-alloy steels

7. Cast iron

In metallurgy, cast iron is an iron alloy rich in 2.1 to 6.67% carbon(6.67% being the maximum). Its high castability allows for the production of castings with complex shapes. The high carbon percentage makes the castings rather brittle and unsuitable for cold forming (forging, rolling, etc.).

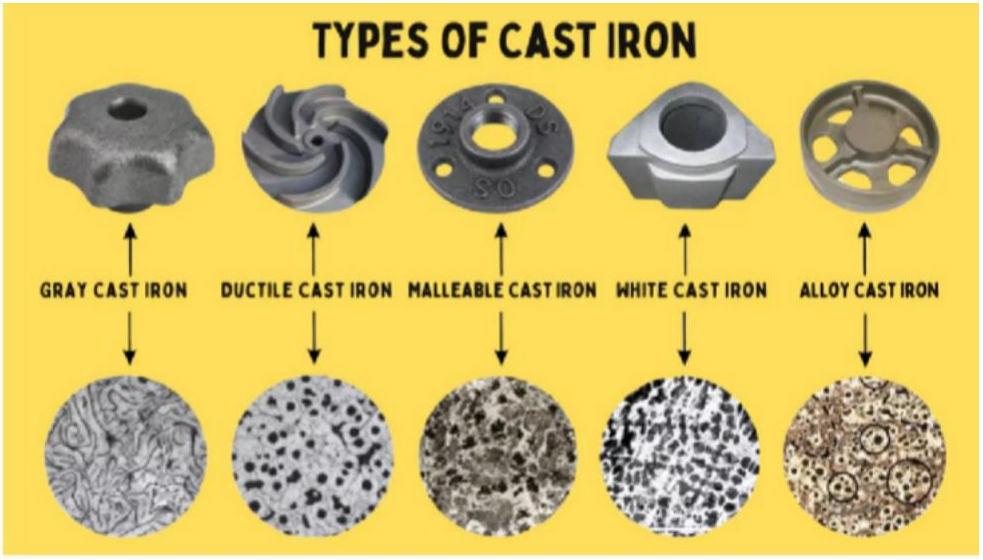

Fig. 9 cast iron

Font classifications and designations: Gray Cast Iron:

Lamellar Graphite Cast Irons (LG)This is the most common type of gray cast iron. The graphite is present in the form of lamellae. The main advantages of LG cast irons are:

- ease of machining;
- very good resistance to corrosion and hot deformation;
- very good vibration absorption;
- dimensional stability (allowing for quiet and geometrically stable machine tools);
- excellent castability;
- low metal cost; Main disadvantages:
- relatively brittle compared to steels and GS cast irons Main uses:

- all mechanical parts (various strength grades);
- machine tool frames, good vibration resistance;

pipes and piping (it is possible to cast large pipes via centrifugal casting). Designation:

FGL (minimum tensile strength)

Spheroidal graphite cast irons (FGS)Cast iron in which the graphite is present in the form of nodules (spheroids). Thisparticular microstructure is obtained by adding magnesium to the cast iron shortlybefore casting (if the cast iron is kept molten, it loses the specific characteristics of GS cast irons after about ten minutes). The magnesium evaporates butcauses rapid crystallization of the graphite in the form of nodules. This microstructure gives it mechanical properties close to those of steel.

Designation: FGS (minimum tensile strength),elongation in % after fracture.



Fig. 10 cast irons

8. Non-ferrous alloys

8.1.Aluminum alloys

Aluminum alloys for casting are alloys whose main constituent is aluminum, intended to be processed using casting techniques. They are often called "light alloys" because their density is significantly lower than that of other metals used in industry.

Main properties:

Good conductor of heat and electricity

Low density: 2.7 kg/dm³- Melting point: 658°C

Low Young's modulus: 70,000 N/mm² 70,000 MPa 7,000 daN/mm² Stiffness coefficient per unit mass is approximately equal to that of steel Low yield strength

High elongation at break (thin sheets, foils, paper)

Corrosion resistance is good provided the alumina layer is formed, because it then prevents corrosion from penetrating the aluminum.

However, combining it with a more electropositive metal (steel, copper alloys) destroys the alumina layer, which can then no longer protect the aluminum.

There are few alloying elements: copper, silicon, magnesium, manganese, titanium, and combinations of magnesium + silicon, zinc + magnesium, and zinc + magnesium + copper.

Designation of aluminum alloys

There are two main classes of aluminum alloys:

1. Wrought alloys: products obtained by hot or cold plastic deformation processes such as extrusion and rolling.The designation includes the following elements:

the prefix EN followed by a space

the letter A, which represents aluminum

the letter W, which represents wrought products

a hyphen- four digits representing the chemical composition

8.2.Casting alloys:

Obtained by casting only. The designation includes the following elements:

- the prefix EN followed by a space
- the letter A, which represents aluminum
- the letter C, which represents cast products
- a hyphen –

Five digits representing the chemical composition:

- The first two indicate the alloy group.
- The last three indicate the chemical composition.

Example: EN AC-21000: aluminum alloy with 4% copper and traces of manganese and titanium.



Fig. 11 casting alloys

8.3.Copper Alloys:

Copper alloys refer to a group of alloys where copper is the predominant component, and are called cuproalloys. They generally have good corrosion resistance. The main families of these alloys are:

- Brasses: copper-zinc (example: CW 612 N, chemical name: CuZn39Pb2);
- Bronzes: copper-tin (example: CW 460 K, chemical name: CuSn8PbP);
- Aluminum-cuproals: copper-aluminum;
- Nickel-cupronickels: copper-nickel;
- Nickel silvers: copper-nickel-zinc;
- Silicon-cuprosimians: copper-silicon;
- Lead-cuprosimians: copper-lead;
- Billons: copper-silver;
- zamaks: zinc-aluminium-magnesium-copper (where copper is a minor component).



Fig. 12 Copper Alloys

8.4.Zinc Alloys

Standard zinc alloys utilized in casting are predominantly alloyed with aluminum (ranging from 4% to 30% and may contain minor additions of magnesium (0.012% to 0.06%) and copper (up to 3%).

8.5.Nickel AlloysPure

The properties of pure nickel are limited to average mechanical performance and efficacy primarily in reducing environments. Consequently, the deliberate introduction of other elements is crucial for formulating alloys with superior mechanical strength and a significantly extended range of corrosion resistance. Specifically, chromium additions enhance resistance against oxidizing agents, while molybdenum—used either independently or synergistically with chromium—imparts robust protection across chemically aggressive media, including

sulfuric, hydrochloric, and marine settings.

8.6.Titanium Alloys

Titanium is a lightweight, strong, white metallic transition metal that is corrosion-resistant. It is primarily used in lightweight and strong alloys, and its oxide is used as a white pigment. Titanium's industrially valuable properties include its corrosion resistance, often combined with resistance to erosion and fire, biocompatibility, and its mechanical properties (strength, ductility, fatigue resistance, etc.), which allow it to be used to manufacture thin, lightweight parts such as sporting goods and orthopedic prostheses.

8.7.Magnesium Alloys

Magnesium is primarily used in aluminum-magnesium alloys.It is also used to facilitate sulfur removal in iron and steel metallurgy. It enables the production of spheroidal graphite cast iron, in which the graphite is found in the form of nodules (spheroids).

Example: What are the different materials used in the manufacture of a car?

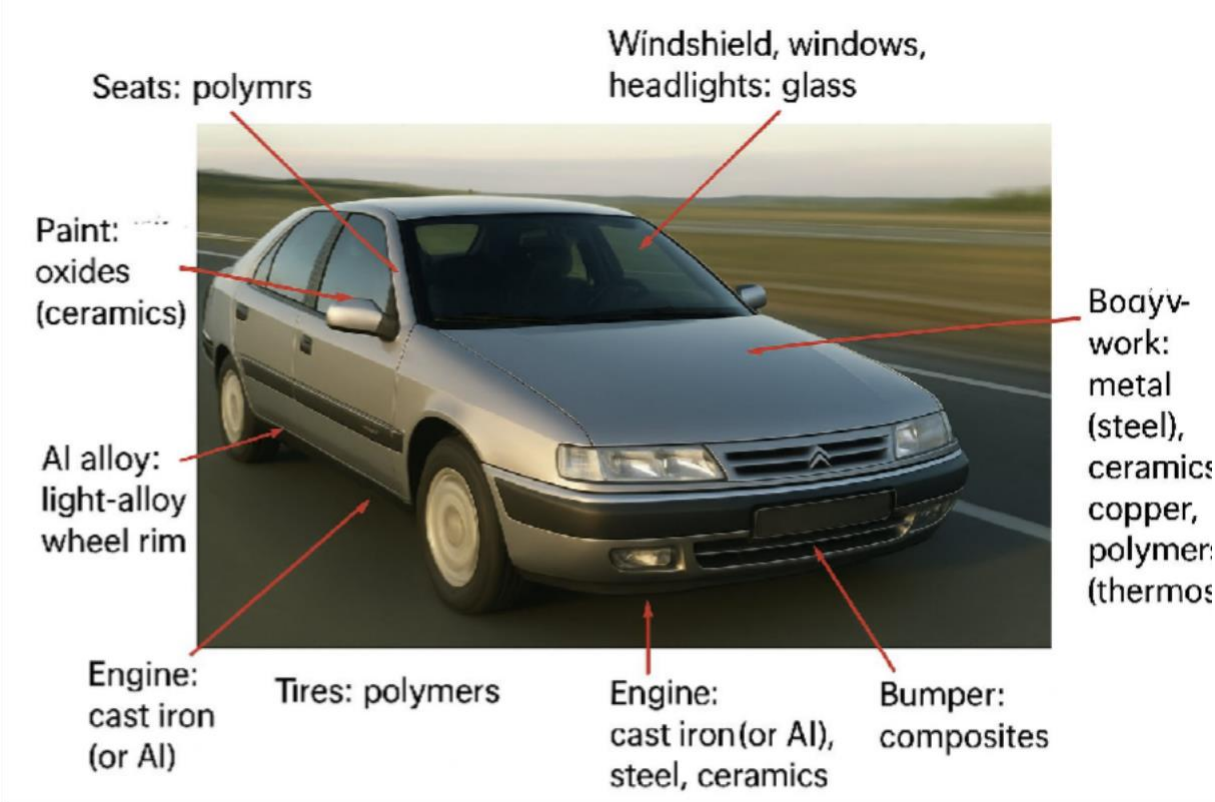

Fig. 13. Different materials used in a car

9. Composite Material

A composite material is an assembly of at least two immiscible components (but with a high capacity for interpenetration) whose properties complement each other.

The resulting heterogeneous material possesses properties that the individual components do not possess. This phenomenon, which improves the material's quality for specific applications (lightness, rigidity under stress, etc.), explains the increasing use of composite materials in various industrial sectors. However, a detailed description of composites remains complex from a mechanical standpoint due to the material's non-homogeneity. A composite material is composed as follows: matrix + reinforcement + optionally: filler and/or additive.

Examples: Reinforced concrete (concrete composite + steel reinforcement), Fiberglass composite + polyester resin.

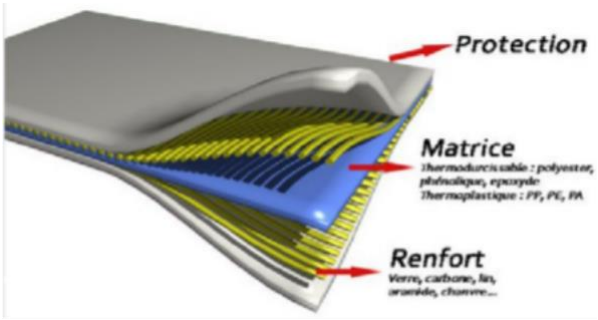

Fig.14. composite material

What are the constituents in a composite material?

1- Reinforcement:

- Discontinuous
- Stronger
- Harder 2- Matrix:
- continuous

✓ What are the functions of a reinforcement

1- Contribute desired properties

2- Load carrying

3- Transfer the strength to matrix

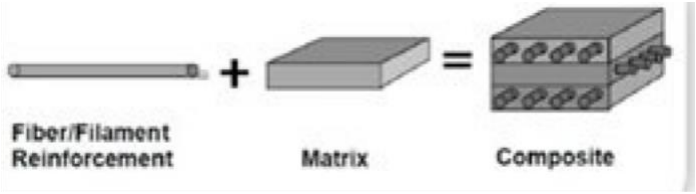

Fig.17. composite material

✓ What are the functions of a matrix

1- Holds the fibres together

2- Protects the fibres from environment

3- Protects the fibres from abrasion (with each other)

4- Helps to maintain the distribution of fibres

5- Distributes the loads evenly between fibres

6- Enhances some of the properties of the resulting material and structural component (that fibre alone is not able to impart). These properties are such as:

- transverse strenghth of a lamina
- impact resistance

10. Plastic Materials

A plastic material, or simply plastic, is a mixture containing a base material (a polymer) that can be molded, shaped, generally under heat and pressure, to produce a semi-finished product or a finished object. Plastics cover a very wide range of synthetic or artificial polymeric materials. Today, a single material can exhibit properties never before combined, such as transparency and impact resistance.

Generally, industrial polymers are not used in their "pure" state, but mixed with miscible or immiscible substances within the polymer matrix. Textiles (yarns and fibers) and elastomers are not strictly plastics. There are many types of plastics; some enjoy great commercial success. Plastics come in many forms: injection-molded parts, tubes, films, fibers, fabrics, sealants, coatings, etc.

They are present in many sectors, even in the most technologically advanced.



Fig.16. plastic material

11. Blast Furnace :

A blast furnace is a vertical shaft thermal reactor engineered for liquid metal processing. The process operates on a counter-current reaction mechanism, wherein a solid burden comprising metallic ore, coke, and fluxing agents is continuously charged at the throat (top), while pressurized blast air introduced via the tuyeres (bottom) sustains high-rate combustion. Although predominantly utilized for reducing iron ore to yield pig iron for subsequent steel refining, this pyrometallurgical method is equally employed in the extractive metallurgy of non-ferrous metals, including lead and copper.

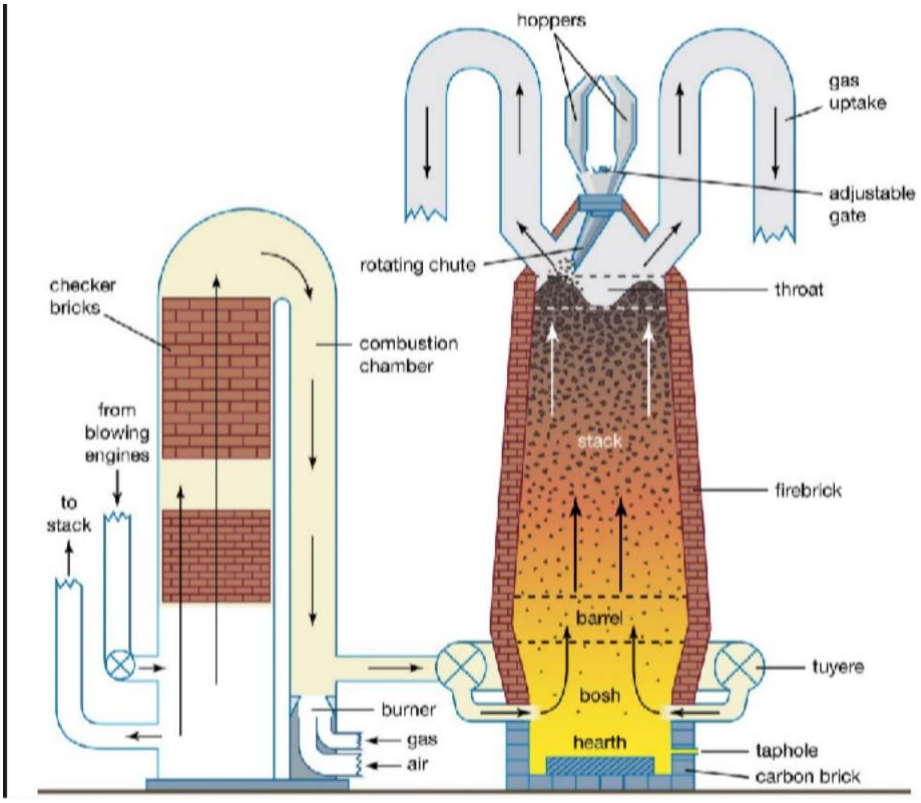

Fig.17. Blast furnace

Blast furnaces produce pig iron from iron ore by the reducing action of carbon (supplied as coke) at a high temperature in the presence of a fluxing agent such as limestone. Ironmaking blast furnaces consist of several zones: a crucible-shaped hearth at the bottom of the furnace; an intermediate zone called a bosh between the hearth and the stack; a vertical shaft (the stack) that extends from the bosh to the top of the furnace; and the furnace top, which contains a mechanism for charging the furnace. The furnace charge, or burden, of iron-bearing materials (e.g., iron ore pellets and sinter), coke, and flux (e.g., limestone) descends through the shaft, where it is preheated and reacts with ascending reducing gases to produce liquid iron and slag that accumulate in the hearth. Air that has been preheated to temperatures from 900 to 1,250 °C

(1,650 and 2,300 °F), together with injected fuel such as oil or natural gas, is blown into the furnace through multiple tuyeres (nozzles) located around the circumference of the furnace near the top of the hearth; these nozzles may number from 12 to as many as 40 on large furnaces. The preheated air is, in turn, supplied from a bustle pipe, a large-diameter pipe encircling the furnace. The preheated air reacts vigorously with the preheated coke, resulting in both the formation of the reducing gas (carbon monoxide) that rises through the furnace and a very high temperature of about 1,650 °C (3,000 °F) that produces the liquid iron and slag.

The bosh is the hottest part of the furnace because of its close proximity to the reaction between air and coke. Molten iron accumulates in the hearth, which has a taphole to draw off the molten iron and, higher up, a slag hole to remove the mixture of impurities and flux. The hearth and bosh are thick-walled structures lined with carbon-type refractory blocks, while the stack is lined with high-quality fireclay brick to protect the furnace shell. To keep these refractory materials from burning out, plates, staves, or sprays for circulating cool water are built into them.

1. The Molding

Molding is a fundamental manufacturing process that involves introducing molten metal into a mold cavity, allowing the metal to solidify and assume the precise shape of the cavity. The metal flow occurs either by gravity or under pressure.

The molding process generally follows three sequential steps:

- Melting the source metal.
- Pouring the molten metal into the mold cavity.
- Allowing the part to cool and solidify.

This process is categorized into two main techniques based on the mold's lifespan:

- Molding with permanent molds.
- Molding with disposable (single-use) molds.

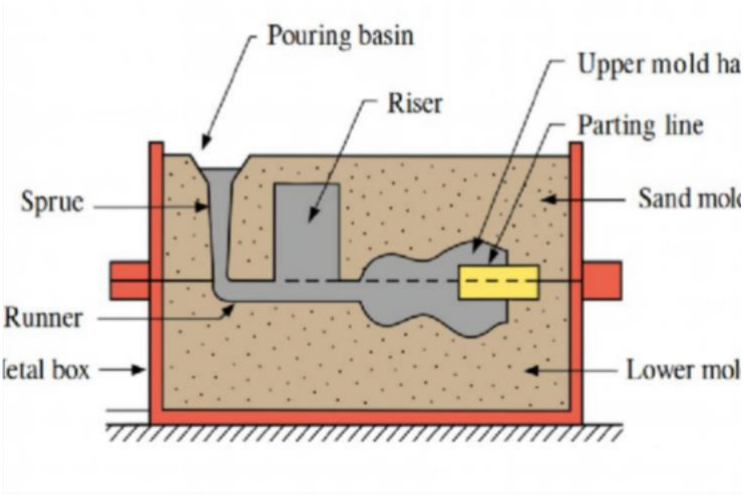

Fig. 01. Operating diagram

1.1. Molding Techniques

I.1.1 With Permanent Molds

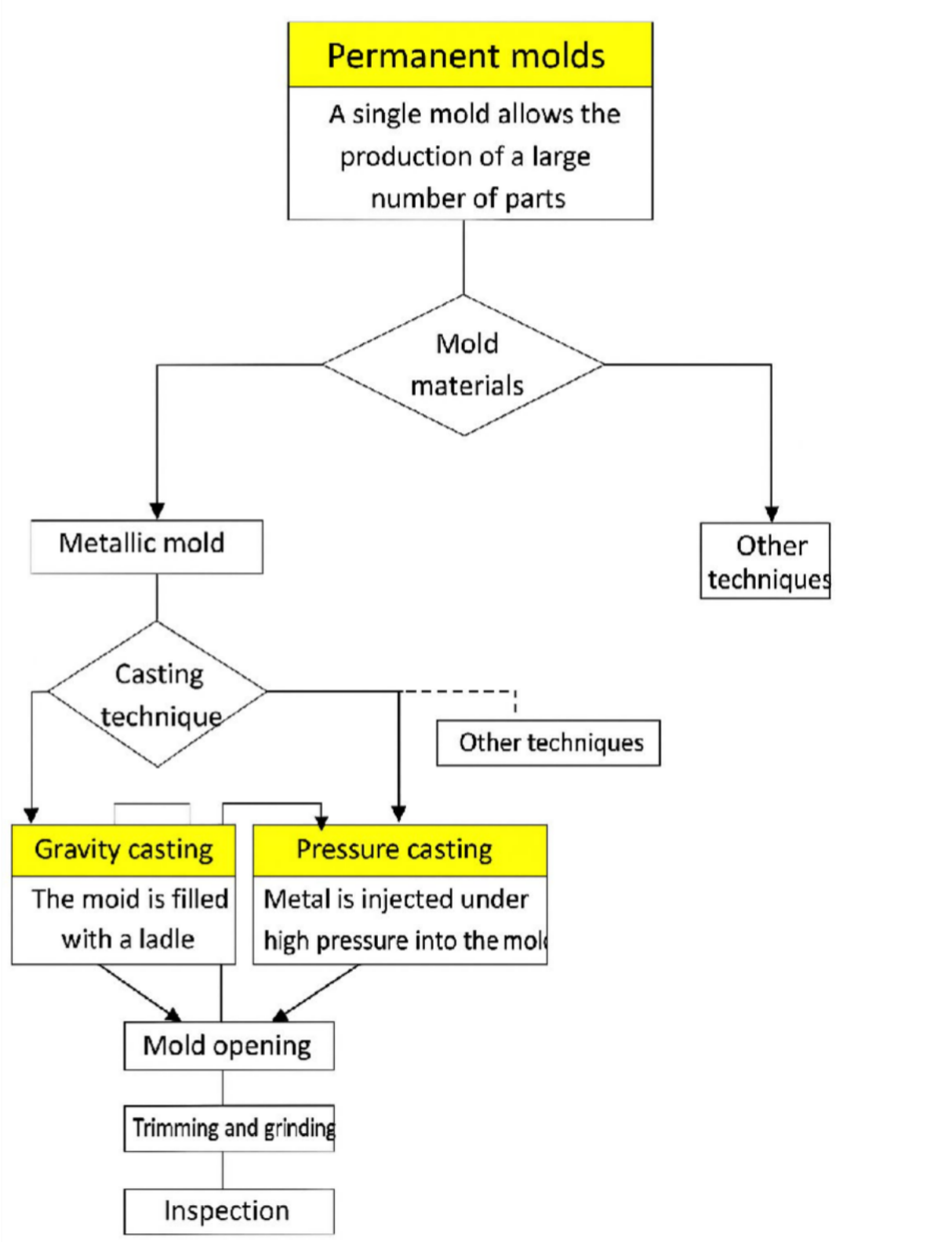

Fig.2. Molding flowchart with permanent molds

I.1.2 With single-use molds

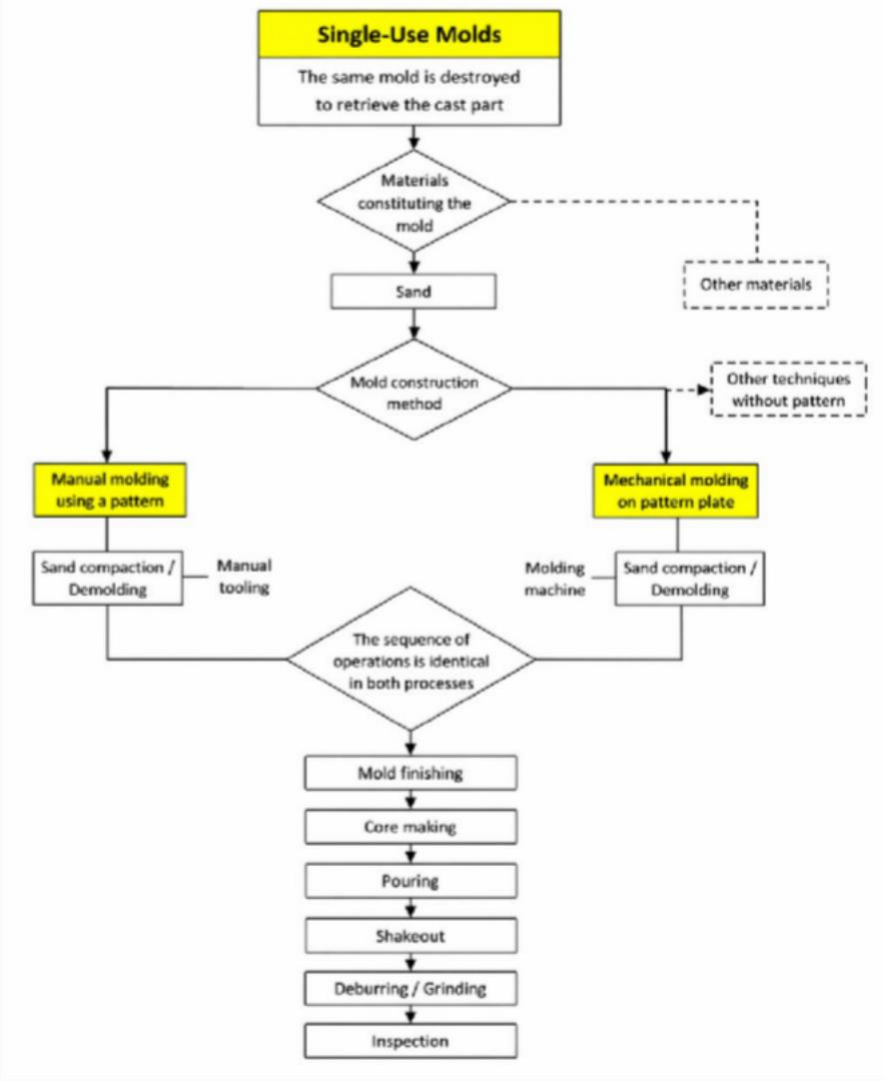

Fig.3. Molding flowchart with disposable molds

1- The Bending (Rolling)

The Bending (Rolling) process is a fundamental sheet metal forming technique that involves the plastic deformation of a flat metal sheet.

This operation aims to generate components with rotational geometry, typically cylindrical or conical shapes. The deformation is accomplished using specialized tooling that consists of cylinders (rolls). These rolls possess a profile identical to the final part and are strategically positioned in various numbers and arrangements around the workpiece to induce the required curvature.

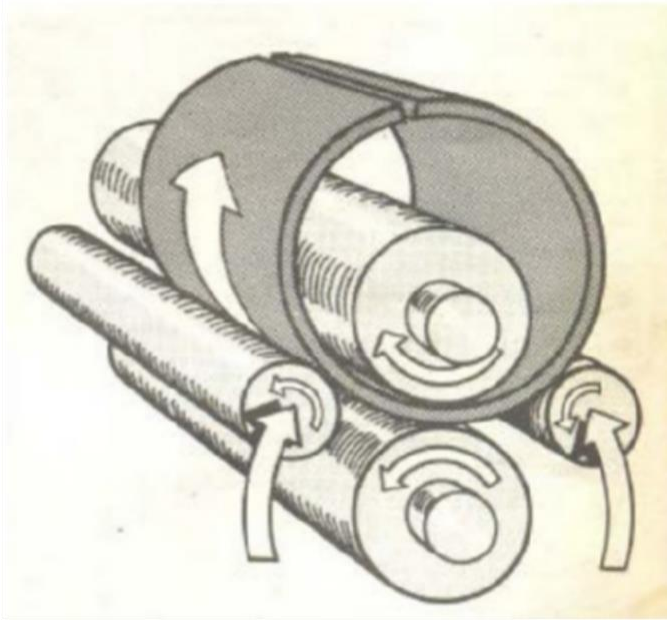

Fig. 04. Schematic diagram of the bending

2- Spinning on a Lathe

The Spinning on a Lathe process is a technique of plastic deformation used to manufacture axisymmetric hollow components. It consists of progressively pressing a sheet metal workpiece (the blank) against a rigid internal die (the mandrel) by means of a specialized forming tool. The fundamental principle requires the coaxial rotation of both the blank and the mandrel, driven by the lathe spindle, to ensure dimensional precision and symmetry in the final component.

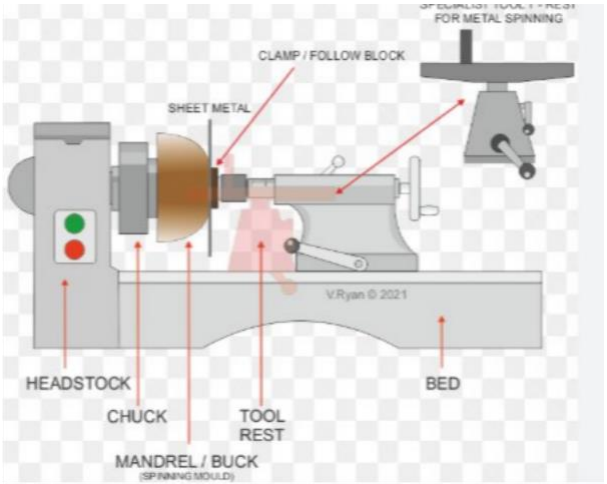

Fig. 05. Schematic diagram of lathe spinning

4. Rolling

Rolling is defined as a core manufacturing process founded on plastic deformation. This technique is applicable to a diverse range of materials, including metals and non-metallic substances exhibiting a paste-like consistency, such as paper. The process operates by achieving deformation through continuous compression as the material passes between two counter-rotating cylinders, collectively referred to as a rolling mill. As an industrial installation, the primary objective of a rolling mill is the reduction of material thickness (typically metal), though it is also utilized for the production of profiled bars (long products).

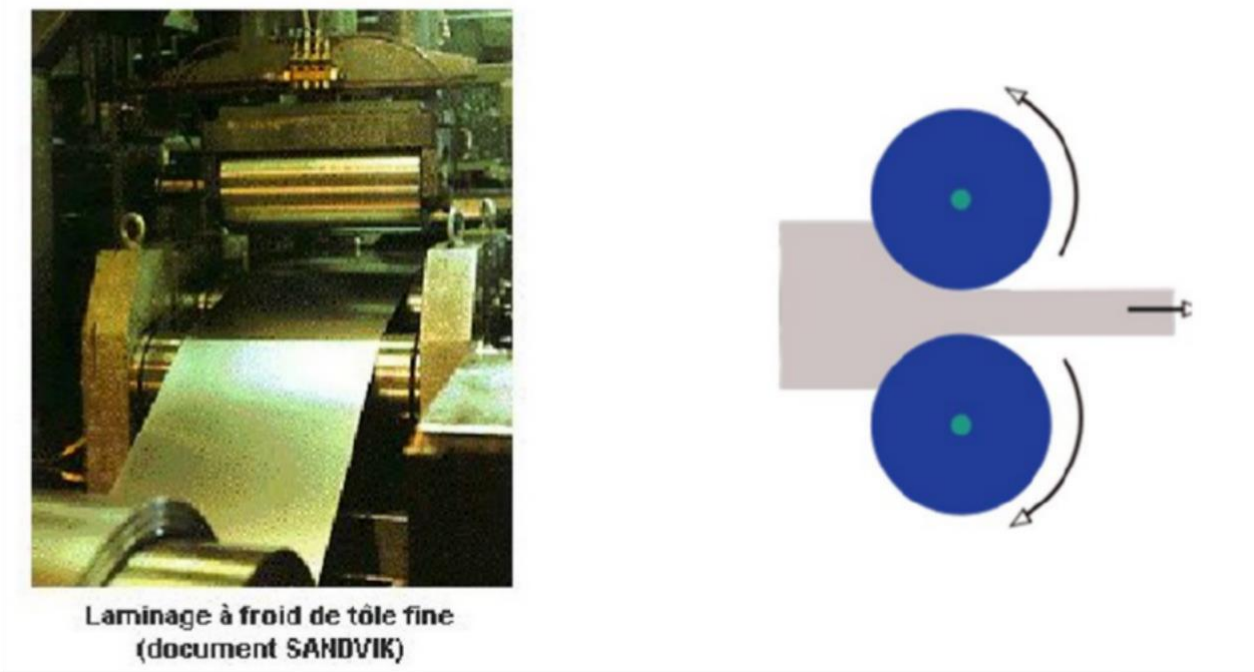

Fig.06. Operating diagrams (Rolling)

5- Wire Drawing (Tréfilage)

The wire rod resulting from initial rolling operations functions as an intermediate product, particularly in critical sectors such as the manufacture of electrical cables, where a substantial reduction in wire diameter is required. The specific operation designed to achieve this reduction in diameter is known as wire drawing (performed by a wire drawing machine or *tréfileuse*).

The underlying principle of wire drawing leverages the plasticity of the metal. The required diameter reduction is achieved by pulling the wire through a calibrated orifice, referred to as a die. This deformation occurs under the combined effect of a tensile force (T) and a radial

compressive force (P)

The die (Tooling)is considered the fundamental component of the wire drawing operation, and its optimal geometry has been extensively studied through theoretical and experimental research. Structurally, the die is composed of a hard core (A) typically fabricated from materials such as tungsten carbide or diamond. This core is secured (fretted) within a steel frame (B) to ensure structural integrity.

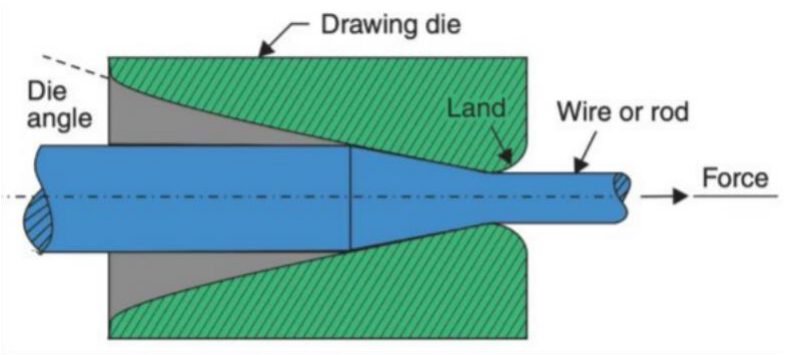

Fig. 07. Profile of a sector



Fig. 08. Wire drawing machine

6- Cutting

6.1 Deep Drawing (Emboutissage)

Deep drawing is a fundamental and widely utilized metal forming process within the manufacturing industry. It enables the creation of complex components possessing non-developable surfaces, starting from thin sheet metal. The operation is performed on specialized press equipment.

The starting material is the thin sheet metal, referred to as the "blank". During the process, the punch deforms the sheet metal by forcing it into a cavity defined by the die. This operation may be executed with or without a blank holder (*serre flan*). The function of the blank holder, when used, is to apply pressure and firmly secure the perimeter of the blank against the die, which controls material flow and prevents wrinkling as the punch executes the deformation.

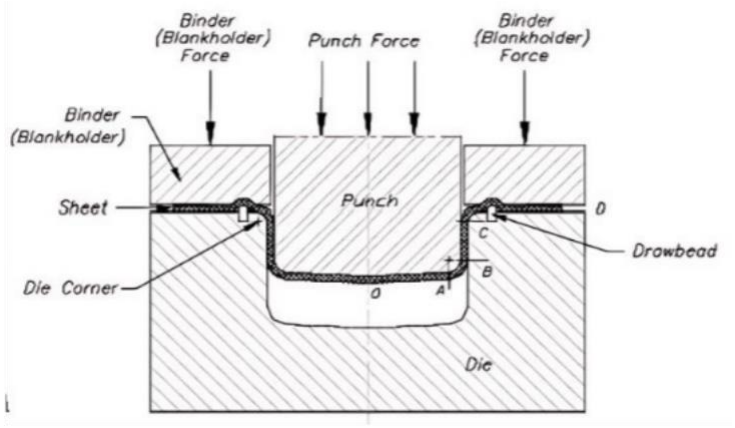

Fig. 09. Schematic diagram of the stamping process

6.2 Waterjet Cutting (Découpe Jet d'Eau)

Waterjet Cutting is a cold-cutting technology that traces its origins back to the 1960s, pioneered by Dr. Norman Franz. The fundamental principle involves the projection of a high-velocity stream of water through a precision nozzle. The material removal mechanism is based on the highly localized erosion and stripping of material caused by the kinetic energy of the jet.

For effective material separation, the process employs water speeds ranging between 600 and 900 meters per second, generated by pressures that can reach up to 4,000 bar. The diameter of the resulting waterjet corresponds precisely to the small nozzle diameter, typically between 0.05 and 0.5 mm. For cutting more refractory or harder materials, an abrasive medium is

introduced into the waterjet to augment the cutting power.

The versatility of Waterjet Cutting enables its use across a vast range of industries and materials, including:

- Manufacturing and Construction: Cutting metals, minerals, glass, and ceramics.
- Soft Materials: Cutting plastics, rubbers, composites, textiles, paper, cardboard, and leather.
- Maintenance and Specialized Tasks: Turbine descaling and cleaning, ship hull stripping, and nuclear decontamination.
- Civil Engineering: Demolition, chipping, and drilling applications in the building sector.

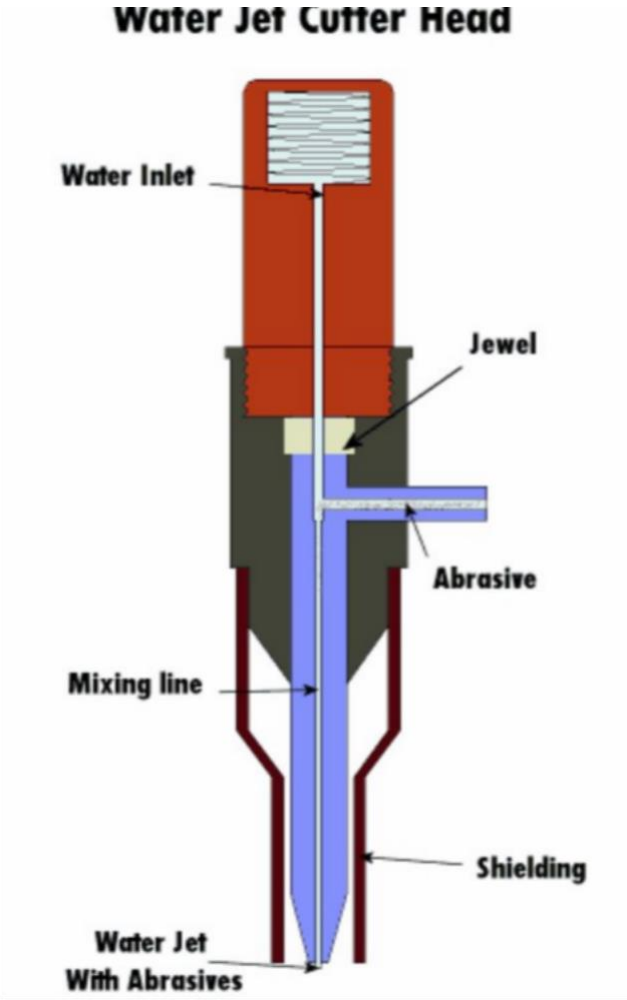

Fig. 10. Water cutting system operating diagram

6.3 Laser Cutting (Découpe Laser)

Laser cutting is categorized as a thermal cutting process, similar to oxy-fuel cutting. The process utilizes a laser source to emit a light beam, which is then highly focused (concentrated) within an optical system, analogous to the focal mechanism in a camera. This focusing action generates

an exceptionally high power density, potentially reaching up to 10,000 kilowatts per square centimeter. The resultant thermal power causes rapid localized melting followed by the partial or total evaporation of the material. A coaxial gas stream envelops the beam, serving to purge the molten material from the cutting slit, known as the kerf.

Laser cutting can be delineated into two primary sub-processes:

1. Sublimation Cutting: In this mode, the material transitions directly from solid to gaseous state (evaporates) under the intense thermal effect. This technique is applicable to various materials, including metals, wood, ceramics, and plastics.

2. Fusion Cutting: Here, the material melts and is subsequently ejected from the kerf by the high-velocity inert gas jet. This method is favored for materials like stainless steel and non-ferrous metals, and it typically enables higher cutting speeds compared to sublimation cutting.

Laser cutting is characterized by several major advantages, including high cutting speed, minimal thermal distortion due to the precise heat-affected zone (HAZ) control, and exceptional precision, often achieving tolerances on the order of one-tenth of a millimeter.

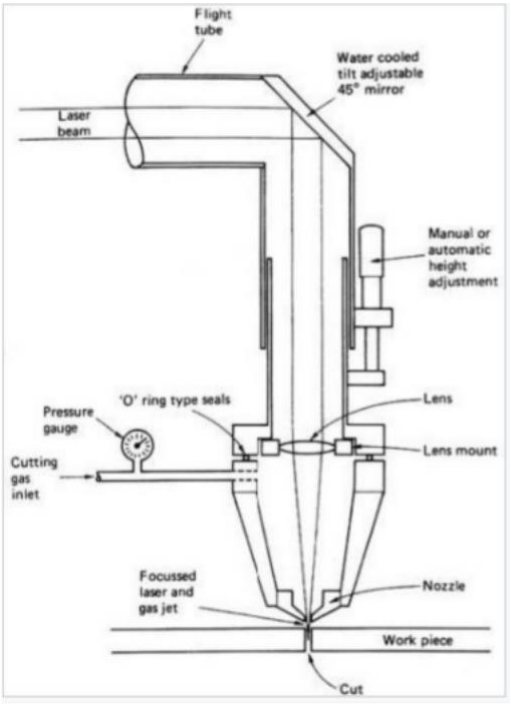

Fig. 11. Schematic diagram

7- Bending (Pliage)

Bending (or Pliage) is a metal shaping process characterized by the absence of material removal. The procedure involves the controlled flexing of a sheet metal workpiece using mechanical tooling, specifically a punch acting upon a supporting die. This operation achieves a localized angular deformation, typically resulting in a very small radius bend, which is induced by the applied localized bending force.

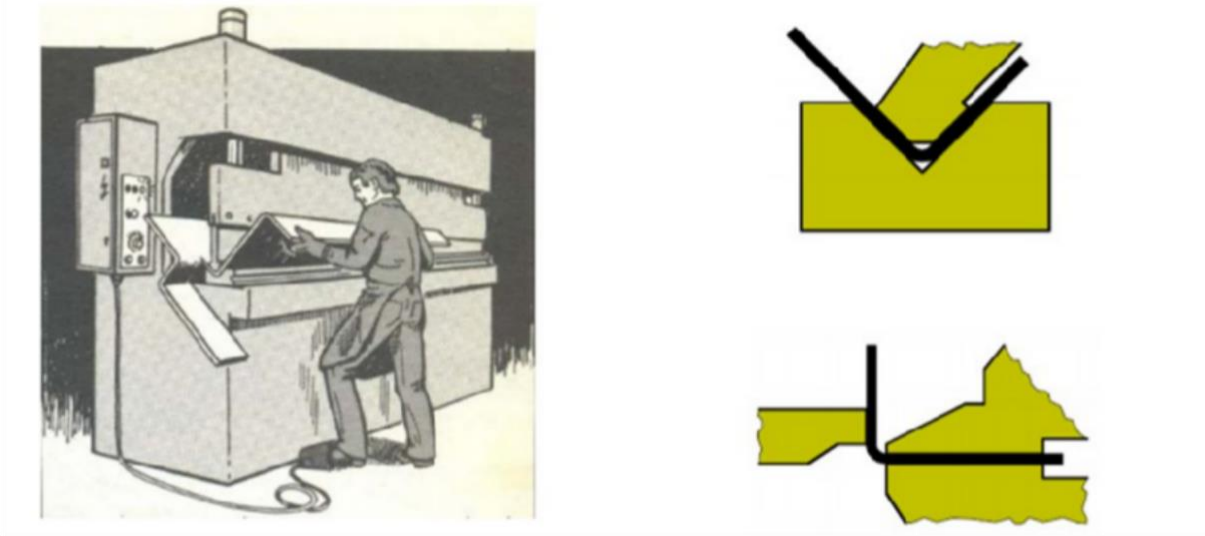

Fig. 12. Diagrams of mechanical actions

8- Sintering and Powder Metallurgy

Sintering is a manufacturing process that entails heating a powder compact below its melting point. Under the influence of heat, the individual powder grains form metallurgical bonds, creating a cohesive and consolidated structure for the final part. A classic analogy for this thermal process is the firing of pottery.

Sintering allows for the production of materials that are typically hard but brittle, possessing controlled porosity. These materials are often valued for being chemically and thermally inert (exhibiting low chemical reactivity and good corrosion resistance). A significant advantage of the process is the precise dimensional control achieved, as the absence of a complete phase change minimizes volume variations and shrinkage compared to casting processes.

Within the field of Powder Metallurgy, sintering is employed to produce mechanical components and various objects from powders of controlled fineness. The process initially involves the agglomeration of these fine powders into a compacted preform, which is subsequently heated to establish the requisite inter-particle cohesion. Sintering can be

conducted on a wide variety of materials, with or without the inclusion of a binder.

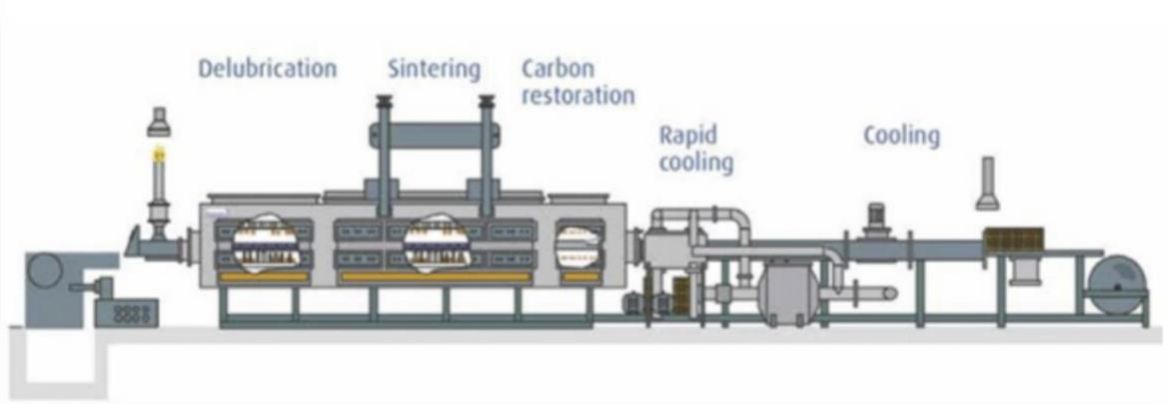

Fig. 13. Sintering in the Powder Metallurgy Process

9- Forging (Forgeage)

Forging is a key metal shaping process achieved through plastic deformation of the material, which can be performed either hot or cold. For hot forging, the raw metal, referred to as the "stock" or "billet" of calculated volume, is heated in furnaces to a specific temperature to ensure it becomes sufficiently malleable and forgeable.

9.1 Manual Forging

This refers to the traditional, artisanal method involving the use of an anvil and hand-operated hammers.



Fig. 14. Manual Forging

9.2 Die Forging and Stamping (Matriçage et Estampage)

Die forging and Stamping are synonymous terms describing a mechanical manufacturing process executed by high-power presses equipped with engraved dies. This technique is essential for the mass production of parts.

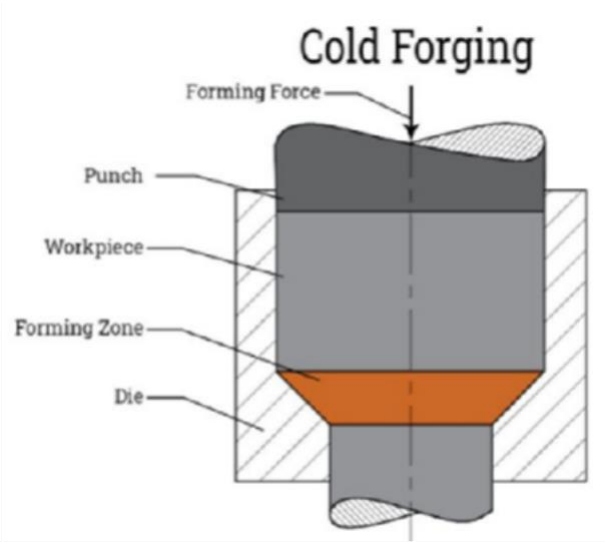

Fig.15. cold forging

• Process Detail: Die forging involves forming raw parts from alloys (e.g., steel, aluminum, copper, titanium, nickel) through plastic deformation after heating. The stock is compressed between two dies: a movable upper die and a fixed lower die. The dies are engraved with the negative of the desired part shape.

• Flash Control: The shaping is achieved by impact or continuous pressure. Excess material is forced into a designated recess to form a flash (burr), which is subsequently trimmed.

Forged components exhibit superior mechanical properties. The substantial and rapid plastic deformations inherent to the process refine the grain structure and enable fiber orientation. This imparts elevated overall characteristics, most notably a high fatigue resistance.

The design of the dies must incorporate specific features to facilitate the process:

- Parting line (Plan de joint).

- Machining allowance (Surépaisseur à l'usinage). Draft angle of 3°-7° (Dépouille) to aid part extraction

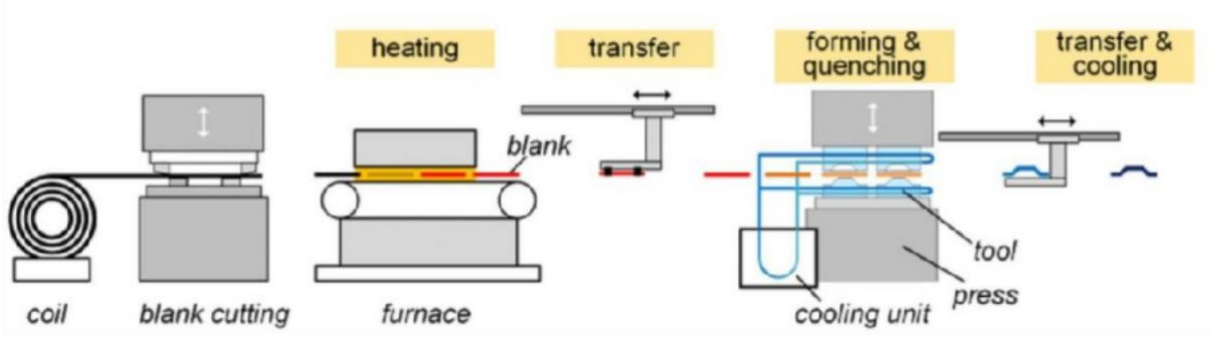

Fig.16. Stamping

1. Introduction

Subtractive manufacturing (machining) is defined by the gradual reduction of a component's size through the controlled, cold-state removal of material using a cutting tool. The removed material takes the form of chips. An operator employs a machine tool to precisely guide the cutting tool and execute the transformation of the work-piece geometry.

2. Drilling

Drilling is the fundamental term used for all processes involved in executing cylindrical through-holes or blind-holes via chip removal with specialized cutting tools. Beyond standard short-hole drilling and deep boring, this category integrates secondary hole-making and finishing operations, including broaching, boring, re-boring, and processes that enhance surface integrity, such as calibrating and roller burnishing.

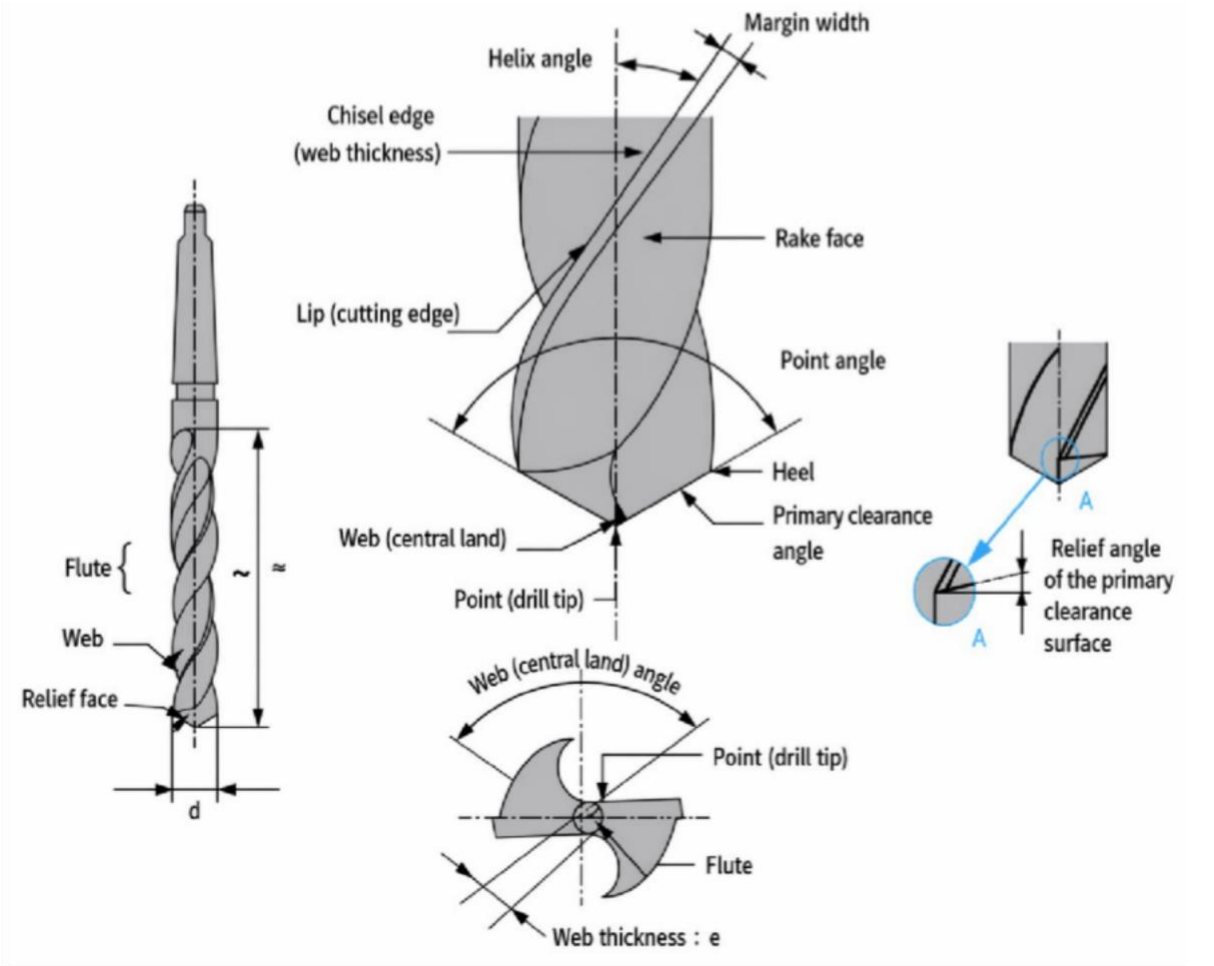

Fig.1. The drill



Fig.2. Drilling

2.1. **High-Speed Steel (HSS)** and **Cemented Carbide:**

Cutting tools are a fundamental component of machining processes, as they remove material while directly influencing dimensional accuracy, surface quality, and manufacturing productivity. The selection of the tool material mainly depends on the required mechanical and thermal properties, as well as the cutting conditions.

Among the most widely used tool materials in the manufacturing industry are **High-Speed Steel (HSS)** and **Cemented Carbide**. HSS tools are well known for their high toughness, ease of sharpening, and relatively low cost, making them particularly suitable for general machining operations and moderate cutting speeds. In contrast, cemented carbide tools provide significantly higher hardness and wear resistance, allowing the use of high cutting speeds and offering longer tool life in intensive industrial production.

In addition to the tool material, the performance of a cutting tool also depends on its geometry, particularly on the main characteristic angles such as the **rake angle**, **clearance angle**, and **wedge angle**. An appropriate design of these geometric parameters improves chip evacuation, reduces cutting forces, and extends tool life.

This section presents the main characteristics of High-Speed Steel and cemented carbide cutting tools, as well as the essential geometrical features that govern their behavior during machining operations.

1. CUTTING TOOLS: HIGH SPEED STEEL (HSS) AND CEMENTED CARBIDE TOOLS
A. HIGH SPEED STEEL (HSS) TOOLS
• Tough and shock resistant
• Good wear resistance up to ~600 °C
• Easy to grind and resharpen
• Suitable for low to medium cutting speeds
• Used for drills, taps, reamers, milling cutters, turning tools, etc.
HSS drill
20 µm
Microstructure of HSS
B. CEMENTED CARBIDE (CARBIDE) TOOLS
• Very high hardness and wear resistance
• Retains hardness up to ~1000 °C
• Allows very high cutting speeds
• Good dimensional stability
• More brittle than HSS
• Used for high-speed turning, milling, drilling of hard materials, etc.
Carbide insert
20 µm
Microstructure of cemented carbide
Typical applications
HSS tools
Drill
Tap
Milling cutter
Reamer
Turning tool
Carbide tools
Indexable insert
Solid carbide end mill
Carbide drill
Comparison | HSS | Cemented Carbide
Hardness | High | Very high
Wear resistance | Good | Excellent
Toughness | Very good | Medium (more brittle)
Hot hardness | Up to ~600 °C | Up to ~1000 °C
Cutting speed | Low to medium | High
Ease of grinding | Very easy | More difficult
Cost | Low | Higher
2. MAIN GEOMETRICAL ANGLES OF A CUTTING TOOL
A. RAKE ANGLE (γ)
The rake angle is the angle between the rake face and a line normal to the work surface
Normal to work surface
Rake face
Chip
Cutting edge
Work surface
Function: Reduces cutting forces, facilitates chip flow.
Typical values: HSS: 10°–25°
Carbide: 5°–20°
B. CLEARANCE (RELIEF) ANGLE (α)
The clearance angle is the angle between the flank (relief) face and the work surface.
Flank (relief) face
Cutting edge
Work surface
Function: Prevents rubbing between the tool flank and the work surface, reduces wear.
Typical values: HSS: 6°–12°
Carbide: 4°–10°
C. WEDGE ANGLE (β)
The wedge angle is the angle between the rake face and the flank.
Rake face
Flank face
Cutting edge
Function: Determines edge strength. For an orthogonal tool:
α + β + γ = 90°
D. END CUTTING EDGE ANGLE (λs)
The end cutting edge angle is the angle between the projection of the main cutting edge and a line perpendicular to the feed.
Feed
Function: Influences chip flow direction, reduces cutting forces and vibration.
Typical values: -5° to +5°
E. SIDE CUTTING EDGE ANGLE (κr)
The side cutting edge angle is the angle between the main cutting edge and the feed direction.
Feed
Function: Affects cutting forces, surface finish and chip thickness.
Typical values: 45°–90°
NOTE:
The selection of these angles depends on:
• Workpiece material
• Tool material (HSS or carbide)
• Type of machining operation
• Cutting conditions (speed, feed, depth of cut)
ORTHOGONAL CUTTING TOOL (REFERENCE)
Rake face
Flank face
Cutting edge
α + β + γ = 90°
(Orthogonal tool)
LEGEND
γ : Rake angle
α : Clearance (relief) angle
β : Wedge angle
λs : End cutting edge angle
κr : Side cutting edge angle
SYMBOLS
Angle
Reference line

2.2. Calculation of Spindle Rotational Speed:

The spindle rotational speed, denoted N (rpm), is determined from the cutting speed Vc and the diameter of the workpiece or tool D, according to the following relation:

$$N = \frac{1000 \times Vc}{\pi \times D}$$

where:

N: rotational speed (rpm); Vc: cutting speed (m/min);

D: diameter of the workpiece or tool (mm); π: mathematical constant ($\pi \approx 3.14$).

This formula allows proper adjustment of the machine-tool speed in order to achieve optimal machining conditions.

Criteria for Selecting Cutting Speed

The selection of cutting speed is a fundamental parameter in machining, as it directly affects productivity, tool life, and the quality of the machined part. The main criteria to be considered are:

Nature and condition of the workpiece material: hardness, mechanical strength, and heat treatment state determine the allowable cutting speed value.

- Tool material: tools made of high-speed steel (HSS), cemented carbide, ceramics, or cubic boron nitride (CBN) exhibit different performances and allow the use of higher or lower cutting speeds.
- Type of operation performed: turning, milling, drilling, or finishing operations require specific cutting conditions.
- Required surface quality: achieving a good surface finish may require adjusting the cutting speed to minimize machining defects.
- Lubrication and cooling conditions: the use of cutting fluid improves heat removal, reduces friction, and may allow an increase in cutting speed while preserving tool life.

3. Sawing

Sawing is a cutting procedure for the initial dimensioning of raw profiles (tubes, bars, plates) achieved by the action of a blade separating the material. Advanced automatic saws allow for the precise adjustment of critical processing variables, including blade velocity, lubrication flow, and the cutting angle. Proper execution necessitates correlating the blade speed with the material's hardness—a lower speed is required for alloys like stainless steel than for construction-grade steel (e.g., S235). Adequate lubrication is essential to mitigate thermal effects and premature tooth wear. Moreover, many modern units feature a controllable

automatic feed rate for enhanced process stability.

3.1 The hacksaw

The hacksaw (*scie à main*) is a non-powered tool engineered for manually cutting components. It is structurally composed of a main frame and a handle, supporting a tensioned cutting blade. The frame system ensures the blade maintains the necessary rigidity and tension for controlled material removal.



Fig.3. Hand saw (for metal)

3.2 The band saw

The band saw functions as an automated or semi-automated cutting tool. The distinction between the two modes lies in the feed control: automatic machines manage the cutting process entirely, while semi-automatic operation requires the user to manually control the blade downfeed to ensure efficient chip removal and prevent excessive thermal load.



Fig.4. Scie à ruban

3.3 Hacksaws:

Hacksaws (*scies alternatives*) are automatic or semi-automatic machines distinguished by their operational mode: the cutting blade performs a reciprocating motion. This action provides an alternative to the continuous linear cutting motion characteristic of band saws.



Fig.5. Reciprocating saw

3- Filing

Filing is a secondary manual machining operation utilized to improve the surface finish and dimensional accuracy of a component. The process involves abrasive material removal achieved by moving a file—a hand tool featuring numerous cutting points—across the workpiece surface.



Fig.6. The filing

A file is characterized by its shape, size, and cutting angle.

1. Double-sided smooth flat file.
2. Double-sided smooth half-flat file.
3. Double-sided bastard flat file.
4. Double-sided smooth half-square file.
5. Double-sided smooth half-triangular file.

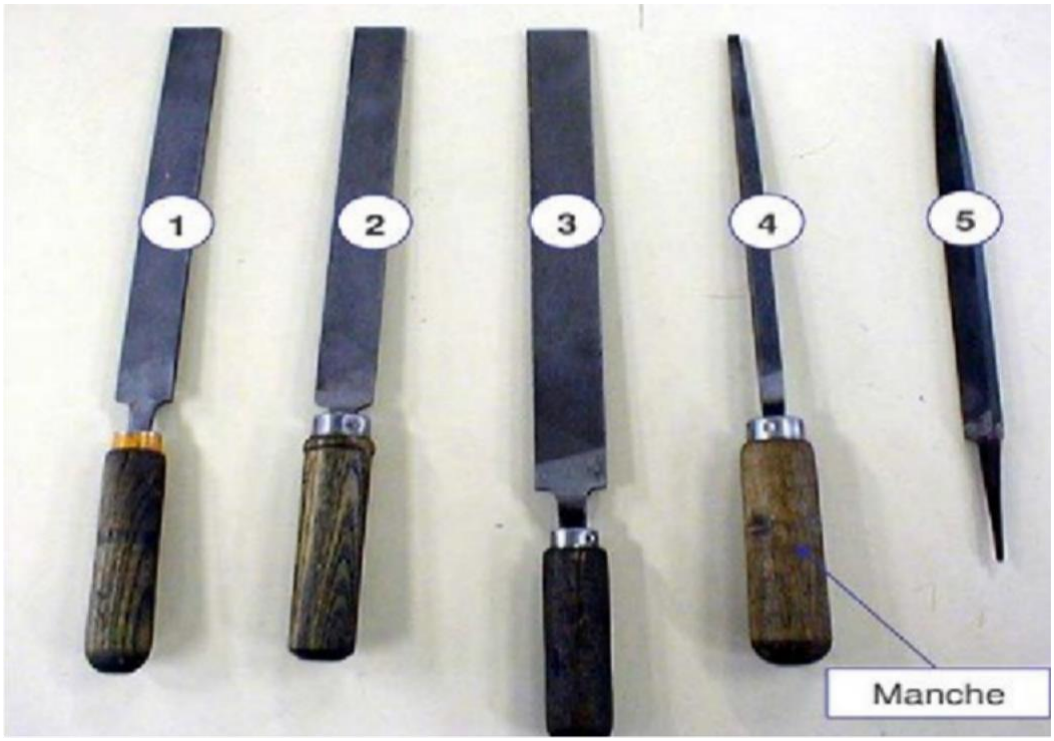

Fig.7. Different types of files

4- Turning

Turning is a subtractive fabrication method characterized by the use of single-point cutting tools on a lathe machine. The primary cutting motion, which is the rotation of the work piece, and the feed motion define the process, which is the continuous engagement of the tool along or across the axis of rotation. The combination of these movements allows for the precise removal of material to achieve the desired rotational symmetry.

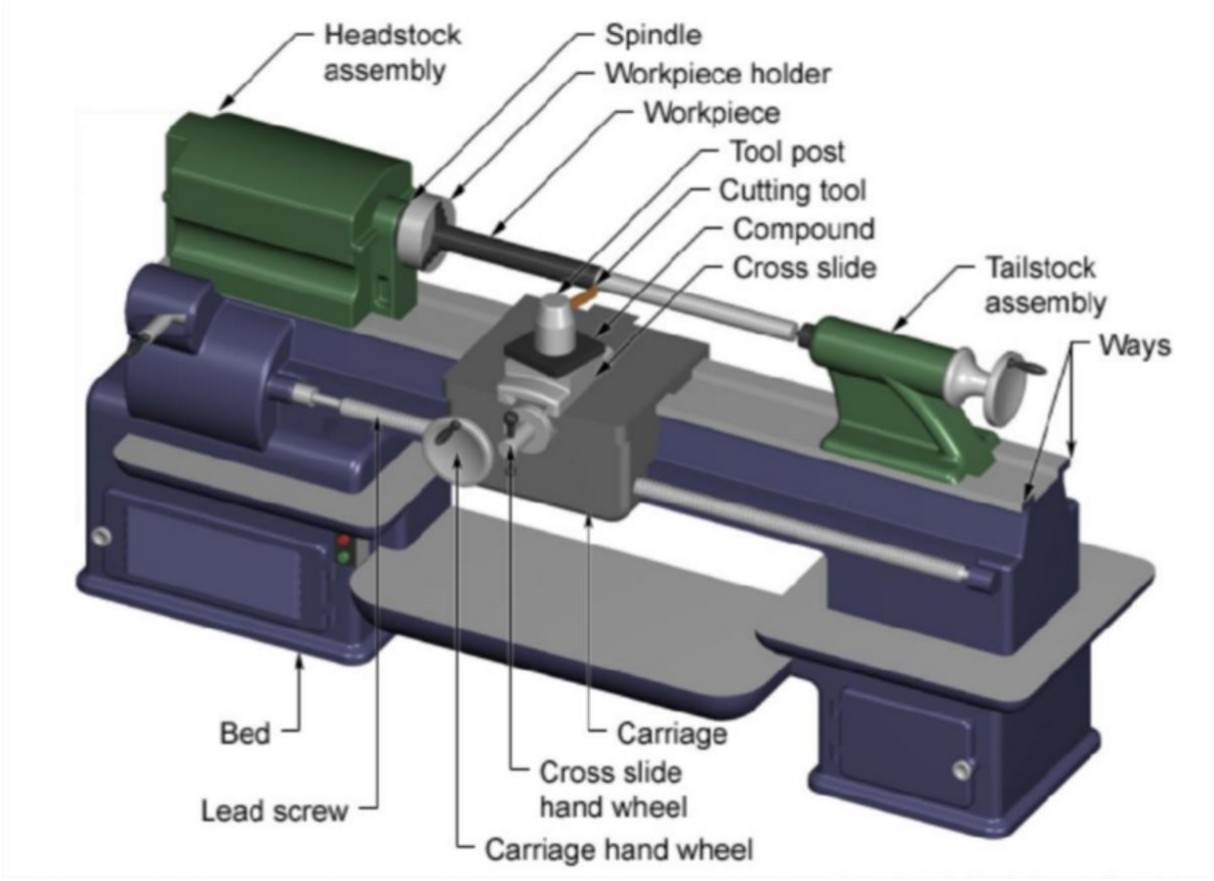

Fig.8. Manual lathe

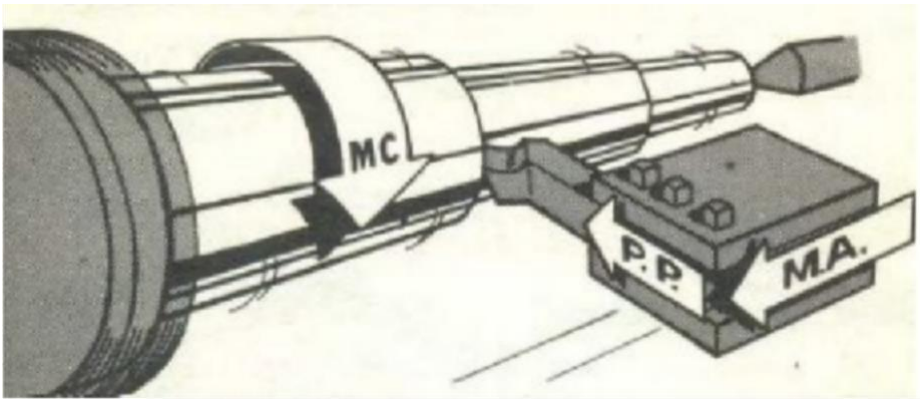

Fig.9. Schematic diagram (Turning)

4.1 Turning Operations

4.1.1. Turning (Chariotage)

This operation involves machining an external cylindrical or conical surface.

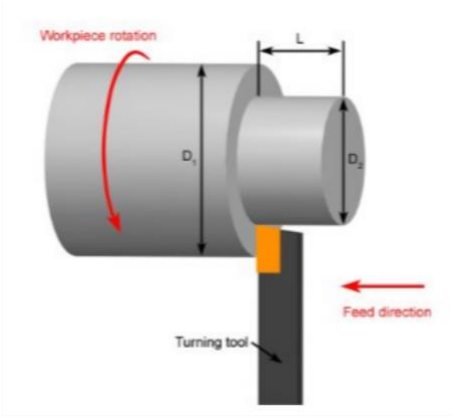

Fig.9. Turning

4.1.2. Facing (Dressage)

This operation consists of machining a flat surface (planar) which is perpendicular to the spindle axis, whether it is an internal or external surface.

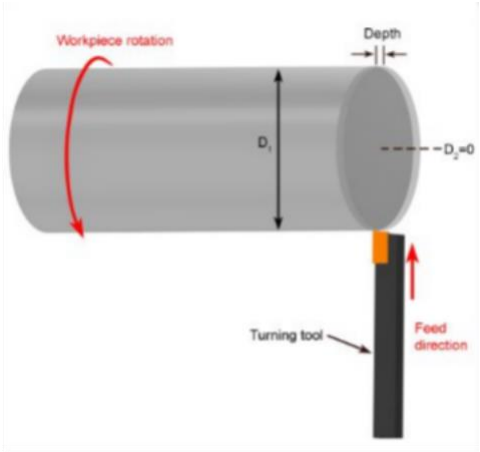

Fig.10. Facing

4.1.3. Grooving (Rainurage)

This operation is used to machine an internal or external groove, typically for accommodating a snap ring (*circlip*) or an O-ring.

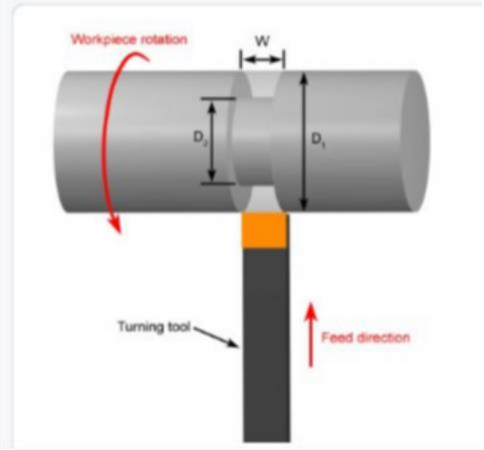

Fig.11. Grooving

4.1.4. Chamfering (Chanfreinage)

This operation consists of machining a small-scale cone to eliminate a sharp corner (angle).

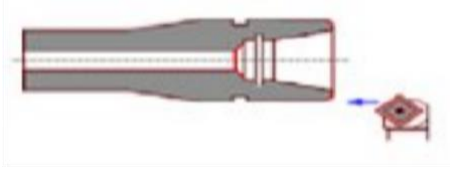

Fig.12. Chamfering

4.1.5. Parting-Off (Tronçonnage)

This operation involves machining a groove down to the workpiece axis in order to sever a section (part off the component).

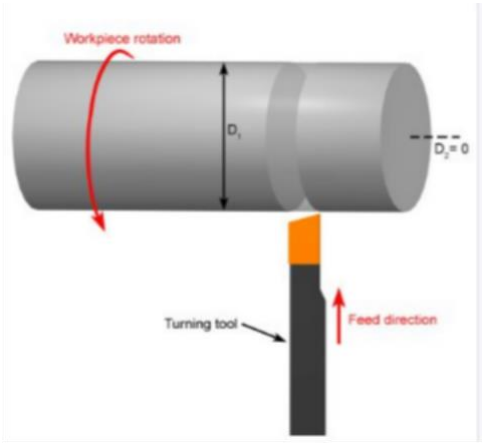

Fig.13. Parting-Off

4.1.6. Threading (Filetage)

This operation is the process of creating an external or internal thread.

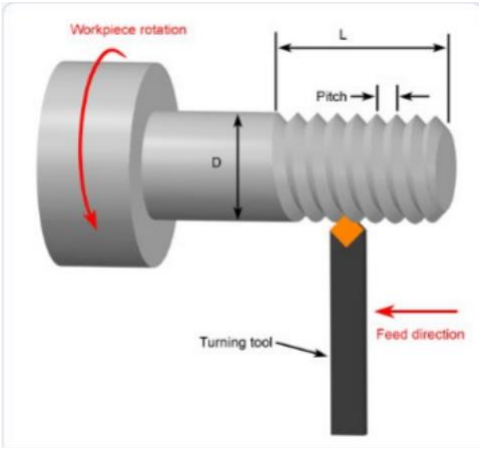

Fig.14. Threading

4.1.7. Drilling (Perçage)

This operation consists of machining a hole using a drill bit while the workpiece rotates.

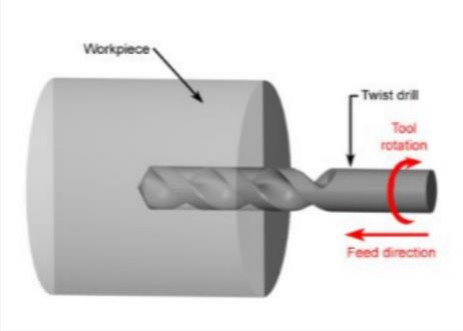

Fig.15. Drilling

4.1.8. Boring (Alésage)

This operation involves machining an internal cylindrical or conical surface (to refine a previously drilled or cast hole).

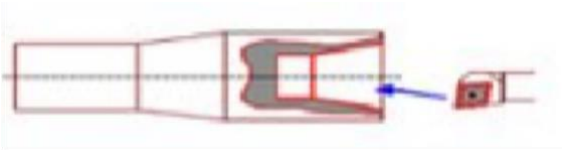

Fig.16. Boring

5- Milling

Milling is a process of material removal distinguished by the use of a multi-point cutting tool (the milling cutter) operating on a dedicated machine tool, the milling machine. This technique is highly effective for machining flat surfaces and, through CNC integration, can produce intricate 3D forms. The removal of material is achieved by the simultaneous rotation of the cutter (the primary cutting motion) and the translational movement of the workpiece (the feed motion). The final cutting motion is therefore the vector resultant of these two movements, while the material engagement (depth of cut) is controlled by the initial workpiece positioning. Milling is a subtractive machining process characterized by the use of a specialized multi-edge cutting tool known as a milling cutter, which operates on a milling machine (the machine tool). Milling is particularly suited for machining planar surfaces, and when utilizing modern Computer Numerical Control (CNC) equipment, it can effectively produce complex geometries. The cutting action in milling is typically achieved by teeth located on the periphery and/or the face of a rotating disk or cylinder.

The kinematics of the process are defined as follows:

- The Tool (Milling Cutter) Rotates: This constitutes the Rotational Motion (R.M.).

• The Workpiece Translates: This represents the Feed Motion (F.M.), typically horizontal.

• The Cutting Motion results from the combined effect of the Rotational Motion and the Feed Motion.

• The Depth of Cut is set by the displacement of the workpiece (Positioning Motion – P.M.).



Fig.17. Mill

5.1 Milling Operations

Milling operations include:

- Surface finishing
- Grooving
- Boring
- Sawing
- Gear cutting

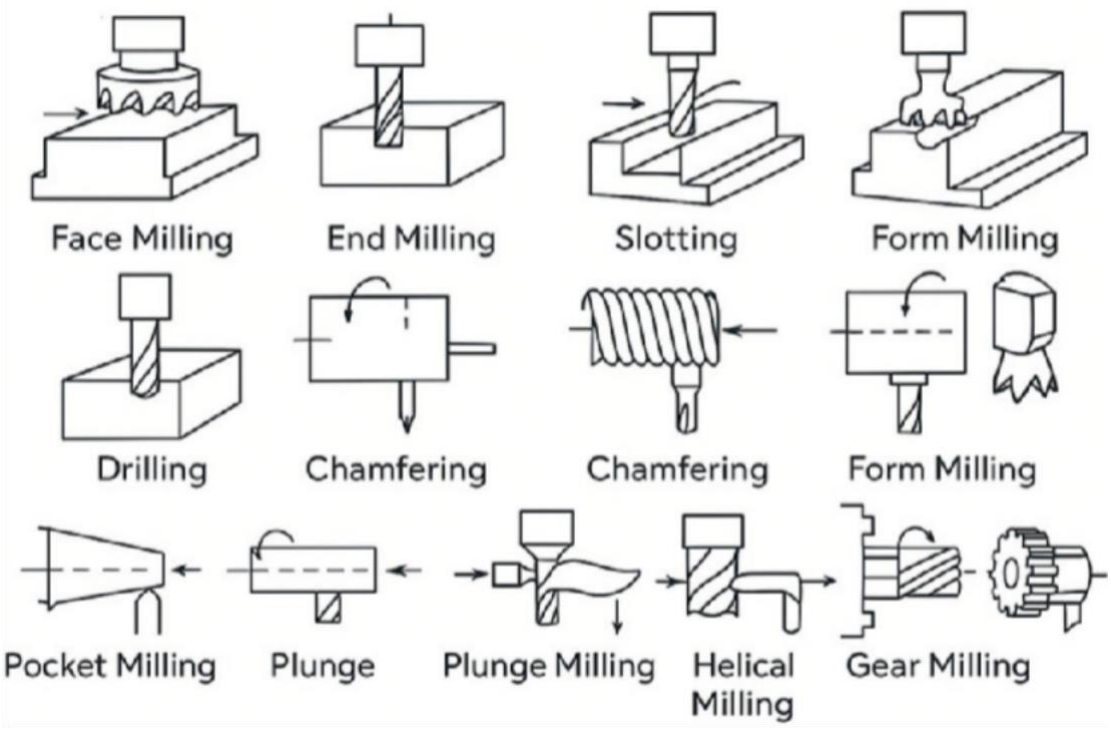

Fig.18. Milling Operations

6- Planing

Planing is a chip-removal procedure primarily used to machine large **flat surfaces**. This process is executed on two principal types of machine tools: the **Shaper** (for smaller workpieces) and the **Planer** (for large workpieces). Both machines employ a single-point cutting tool to progressively remove material, defining them as specialized tools for generating planar geometry.

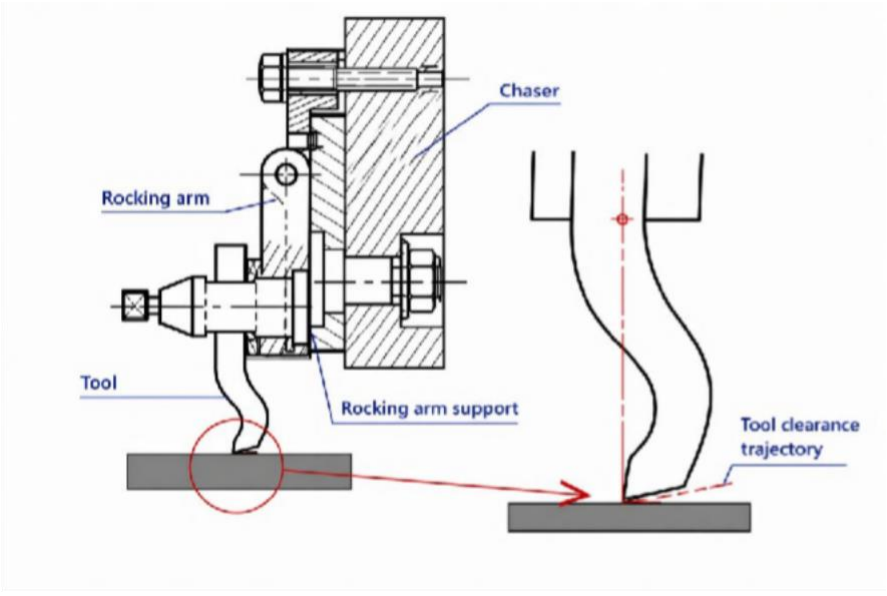

Fig.19. Planing

6.1 The Shaper

The **Shaper** is characterized by its kinematic structure: the **tool** is responsible for the **Cutting Motion (C.M.)** via a linear, reciprocating stroke. During the non-cutting return stroke, the **table** advances laterally, defining the **Feed Motion (F.M.)** and ensuring that a new layer of material is ready to be removed. The **Depth of Cut (D.C.)** is controlled by the vertical adjustment of the tool carriage assembly.

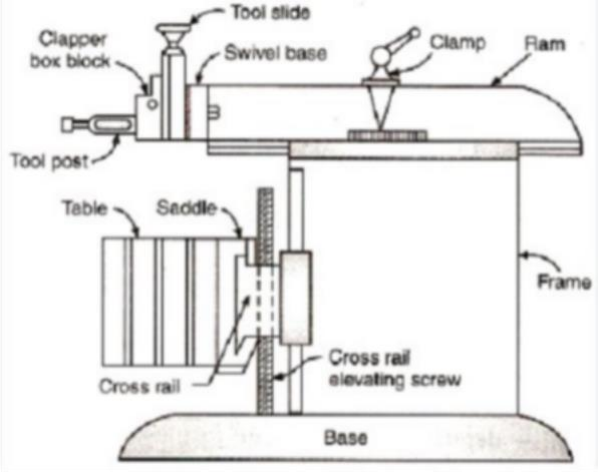

Fig.20. The Shaper

7.2. The Planer

The **Planer** is kinematically distinct in that the **workpiece table** executes the linear **Cutting Motion (C.M.)**. The tool remains fixed, and its position determines the incremental **Feed Motion (F.M.)** and the **Depth of Cut (D.C.)** for each pass.

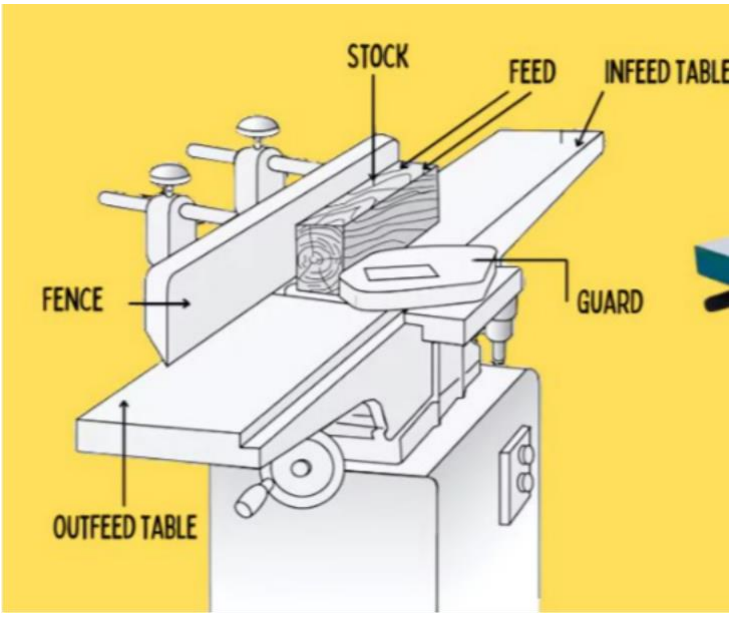

Fig.21. The Planer

7- Grinding

Abrasive machining (grinding) is a high-precision manufacturing method where material is removed from metallic or non-metallic parts using **grinding wheels**. This process is broadly classified into three distinct application types, typically differentiated by the geometric relationship between the wheel and the workpiece.

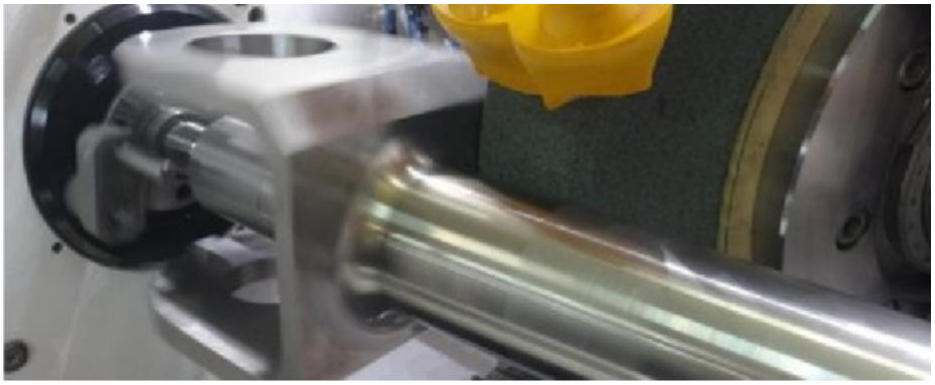

Fig.22. Grinding

Abrasive machining encompasses several specialized processes. Among these, surface, cylindrical, and profile grinding are typically employed for the fabrication of high-precision mechanical parts. Conversely, operations such as gear cutting and tool sharpening are directed chiefly towards the production of cutting tools.

A fundamental commonality between these applications is their shared reliance on stringent quality standards. Both demand exceptional geometric accuracy and carefully controlled metallurgical characteristics in the finished workpiece. This material removal is achieved primarily through the use of grinding wheels and abrasive belts.



Fig.23. Sharpening

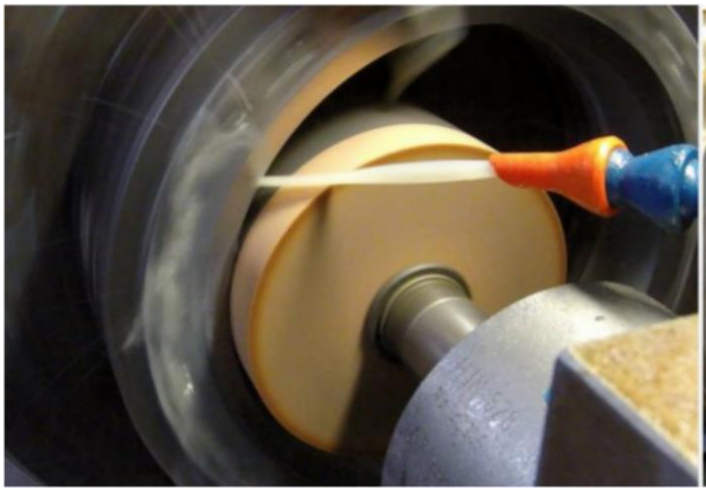

*Fig.24.*Surface grinding



Fig.25. Cylindrical grinding

1. Introduction

Mechanical assembly is defined by the outcome of linking discrete parts into a coherent system, as well as by the specific procedures and technical methodologies that enable the creation of these linkages.

2. Degree of Constraint

A fundamental characteristic of any assembly is its degree of constraint, which defines the independent relative motions (translational and rotational) either permitted or restricted between the connected parts.

3. Assembly Typology

Assemblies are further categorized based on key operational and structural properties, primarily as permanent or non-permanent, and direct or indirect.

3.1 Permanent Assembly

A permanent, or non-demountable, assembly is designed such that its disassembly necessitates the deformation or destruction of at least one of the constituent components. This renders the joint irreversible for the intended service life.

- Common Techniques: Welding, Clinching, Press-fitting (Interference fits), Certain adhesive bonds, Crimping, Specific types of shrink fits.

3.2 Non-Permanent Assembly

A non-permanent, or demountable, assembly is engineered to be disengaged without significant damage to the primary components, allowing for their reuse. It is noted that the specific fastener itself may not always be reusable.

- Common Techniques: Threaded fasteners (screws, nuts, bolts, studs), Keys (Woodruff, parallel, tangential), Wedging actions (e.g., clamps), Pins, Tapered interference fits, Certain specialized adhesives.

3.3 Direct Assembly

In a direct assembly, the joint is achieved solely through the designed geometry of the mating parts, requiring no additional components. The connection is formed by the parts themselves.

- Common Techniques: Welding, Shrink fits (Frettage), Clinching, Crimping, Snap-fits.

3.4 Indirect Assembly

An indirect assembly relies on one or more intermediary components specifically introduced to create the connection between the primary parts.

- Common Fasteners & Elements: Threaded fasteners (screws, bolts, nuts), Rivets, Keys, Adhesives, Pins, Mortise and tenon joints (with or without dowels), Tolerance rings, Circlips (retaining rings), Nails, Staples.

This classification can also be viewed through the lens of specific industrial domains, which often employ characteristic joining methods:

- Woodworking/Metalworking (e.g., Aluminum): Custom fixation systems, power transmission couplings.
- Plumbing: Valve assemblies, compression fittings, socket joints.
- Structural Framing: Traditional and modern joining techniques for load-bearing structures.

4- Assembly Methodologies: Exemplary Cases

4.1 Welding

Welding is a manufacturing process utilized to create a permanent, coalescent bond between metallic components. It is broadly categorized into two principal techniques based on the metallurgy of the joint:

- Heterogeneous welding (Brazing and Soldering)
- Autogenous welding (Fusion Welding)

4.1.1 Heterogeneous Welding (Brazing & Soldering)

This technique involves introducing a filler metal with a lower melting point than the base materials into the joint. The filler metal is heated to a liquid state, where it flows by capillary action between the closely fitted parts and, upon solidification, forms a strong metallurgical bond with each base material.

The process requires preparatory steps where the operator cleans and degreases the components to be joined to ensure optimal adhesion. The primary metal of the components being assembled is termed the "base metal."

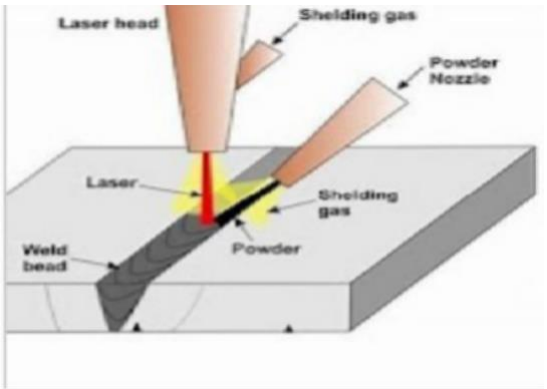

Fig.1. Brazing

The workpiece is first secured in its final operational position. The joint area is then heated using an appropriate heat source, such as a torch. A variety of thermal energy sources can be employed for this purpose, including soldering irons, heat lamps, torches, furnaces, electric resistance, induction coils, heated baths, among others.

Upon contact with the heated components, the filler metal melts and is drawn by capillary action into the narrow gap between the surfaces to be joined. It subsequently diffuses into the base metal, forming a metallurgical bond.

In some cases, a torch flame is applied directly to the filler metal to ensure its melting. This specific hybrid technique is referred to as torch brazing or sweat brazing.

The most commonly used filler alloys are based on metals such as tin, lead, cadmium, copper, and silver. A critical requirement is that their melting points must be lower than that of the base metal to prevent workpiece distortion or damage. These alloys are commercially available in various forms, including wire, rods, strips, and powders.

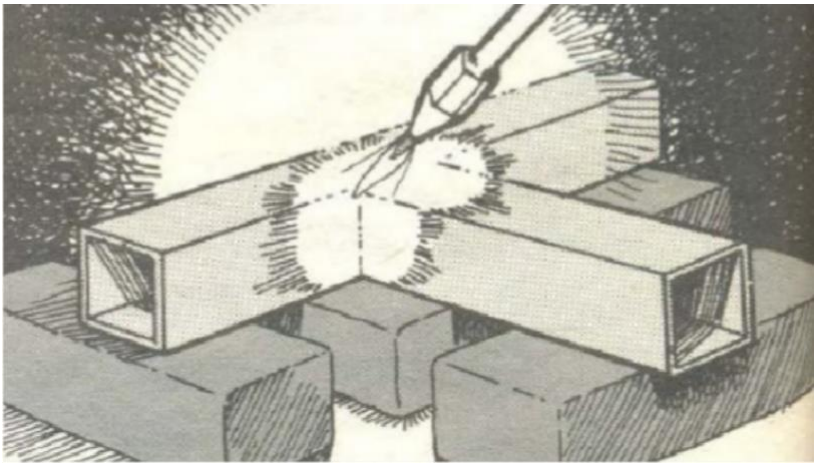

Fig.2. Torch welding

4.1.2 Autogenous Welding

Autogenous welding, more commonly referred to simply as fusion welding, involves joining two components of the same base metal through localized melting and coalescence along their edges. The numerous autogenous welding processes are systematically classified based on the primary energy source utilized to generate the heat required for this localized fusion.

The principal energy sources employed are as follows:

- Thermochemical Energy: Utilizing exothermic chemical reactions, such as in gas combustion (e.g., oxy-acetylene welding) or aluminothermic processes.
- Electrical Energy: Employing an electric arc (as in Arc Welding) or electrical resistance at the joint interface (as in Resistance Spot Welding).
- Mechanical Energy: Generating heat through friction, applied pressure, or ultrasonic

vibration (e.g., Friction Stir Welding, Ultrasonic Welding).

• Focused Energy: Using highly concentrated energy beams, such as electron bombardment (Electron Beam Welding) or photons from a laser (Laser Beam Welding).

4.1.3 Exemplary Processes

4.1.3.1 Aluminothermy (Thermite Welding)

Aluminothermy is a welding process that utilizes the exothermic chemical reaction between powdered aluminum and iron oxide. This highly energetic reaction generates the intense heat required for the localized fusion of the workpieces. The process is notably employed in specialized applications, most prominently for the in-situ welding of railway rails.

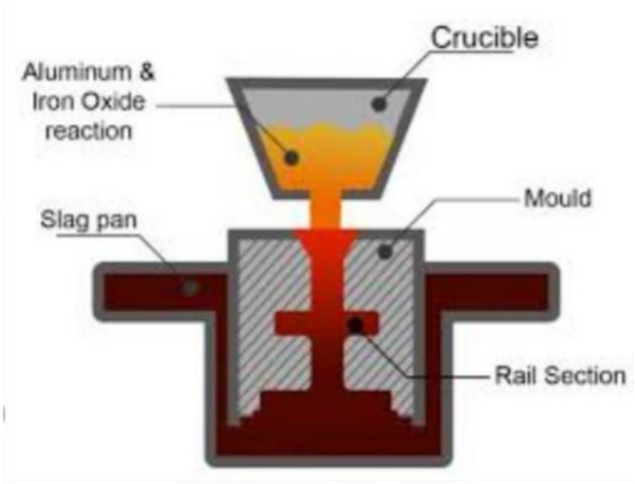

Fig.3. Aluminothermics

4.1.3.2 Oxy-Fuel Welding (Gas Combustion)

This process utilizes a high-temperature flame generated by the combustion of a fuel gas, typically acetylene, with pure oxygen. This flame provides the concentrated heat source necessary to melt the base metals and any filler material at the joint interface.



Fig.4. Oxyacetylene welding

4.1.3.3 Electric Arc Welding

An electrical power source generates a flow of free electrons in a single direction through a conductor, creating an electric current. For this current to flow continuously, the circuit must form a closed loop. If the circuit is broken, or "open," the current ceases because air is not a conductive medium.

In arc welding, this principle is utilized by creating a controlled, sustained electrical discharge—known as an arc—across a small gap between an electrode and the workpiece. This arc is maintained as long as the electrode is held at an appropriate distance from the workpiece, ionizing the air in the gap and creating a conductive plasma channel that allows current to flow, thereby generating the intense heat required for fusion.

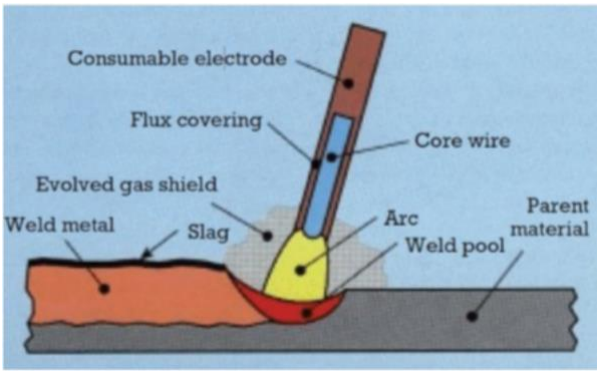

Fig.5. Operating diagram (Electric arc welding)

4.2 Riveting

Rivets are permanent mechanical fasteners used to join multiple components together. They consist of cylindrical shafts made from materials such as steel, aluminum, brass, or copper. One end of the rivet is pre-formed into a standardized head. During installation, the opposing end is plastically deformed to create a second head, known as the shop head or buck-tail, which securely clamps the parts together.

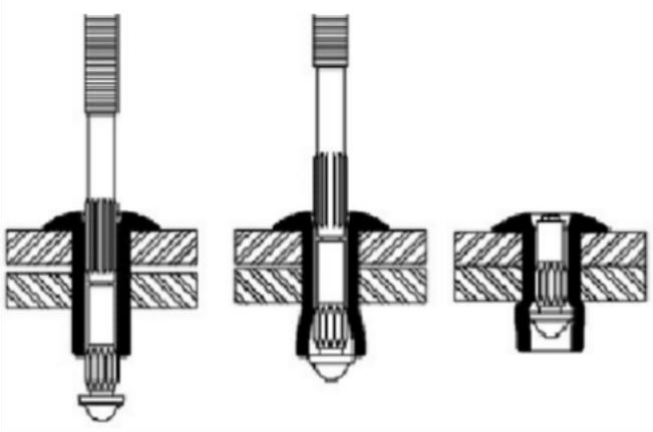

Fig.6. Riveting

4.3 Press-Fit Assembly

Press-fitting is an assembly operation fundamentally governed by frictional forces. The principle of an interference fit is conceptually straightforward: a cylindrical shaft is inserted into a bore of a nominally identical form. To eliminate the two remaining translational degrees of freedom, a form-closure connection must be established, which is achieved by superimposing a force-closure connection through the interference-induced friction.

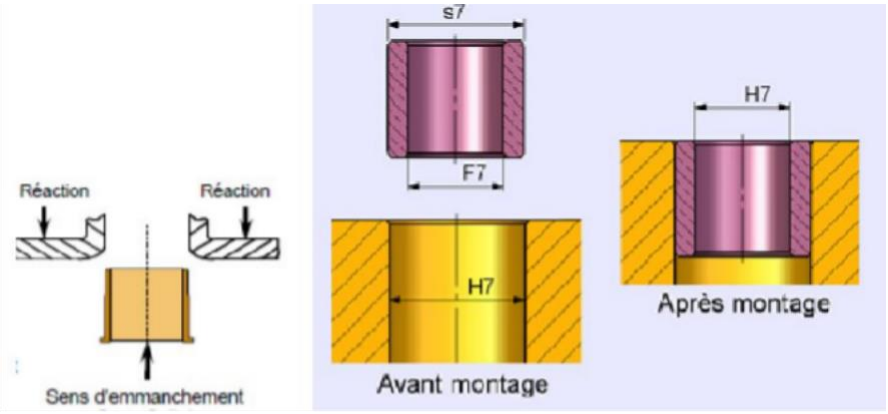

Fig.7. Schematic diagram "Force fitting"

4.4 Self-Locking

The phenomenon of self-locking occurs in a mechanical system when its configuration generates sufficient internal friction or adhesion to prevent any motion, thereby maintaining static equilibrium regardless of the magnitude of externally applied forces.



Fig.8. Clamp (brace)

4.5 Tapered Interference Fit

A tapered interference fit, also known as a conical wedging action, is achieved when a component features a tapered bore and the mating shaft is machined with a corresponding cone of identical angle.

When the shaft is driven into the bore, either by press force or impact, the resulting elastic deformation and interfacial friction generate a secure, self-holding joint through the wedging action of the tapered surfaces.

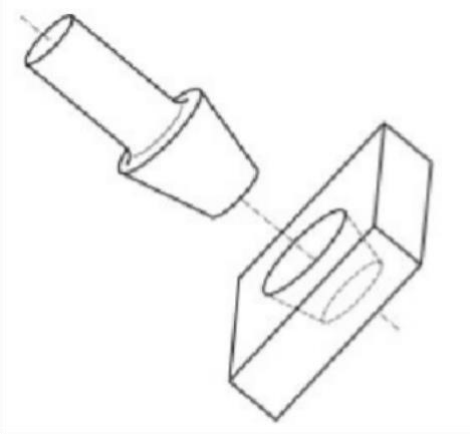

Fig.9. Conical assembly

4.6 Threaded Fasteners: Screws and Bolts

4.6.1 Bolted Joints

Bolting is a method for creating a non-permanent, demountable mechanical assembly. Bolts are used to establish a continuous connection between components or to ensure the full transmission of loads from one part of a structure to another.

In technical terminology, a distinction is often made: a "bolt" typically refers to a fastener with a partially threaded shank, whereas a "screw" commonly implies a fully threaded shank, although the term "bolt" is the correct descriptor for the assembly when used with a nut.

A screw, commonly and generally referred to as such, is a mechanical element consisting of a threaded shank and a head, designed to fasten one or more parts by applying clamping pressure. This fastening method creates a demountable planar connection by preloading the assembled parts against each other. As long as the tensile forces applied to the joint do not exceed the preload exerted by the screw, the assembly benefits from the high stiffness of the clamped components themselves.

4.6.2 Lead Screw and Nut Assembly

A lead screw and nut assembly is a mechanism designed to convert rotary motion into linear translation. The system comprises two primary components: a threaded rod (the screw), which is driven in rotation about a fixed axis relative to the frame, and a mating component with an internal thread (the nut), which is constrained to move in linear translation relative to that same frame.

As the screw rotates, the nut is driven along the screw's axis, resulting in precise linear displacement. This mechanism functions as a motion transformation device, utilizing the fundamental principle of the helical pair inherent in the screw thread. Its primary function is the conversion of rotational motion into translational motion.

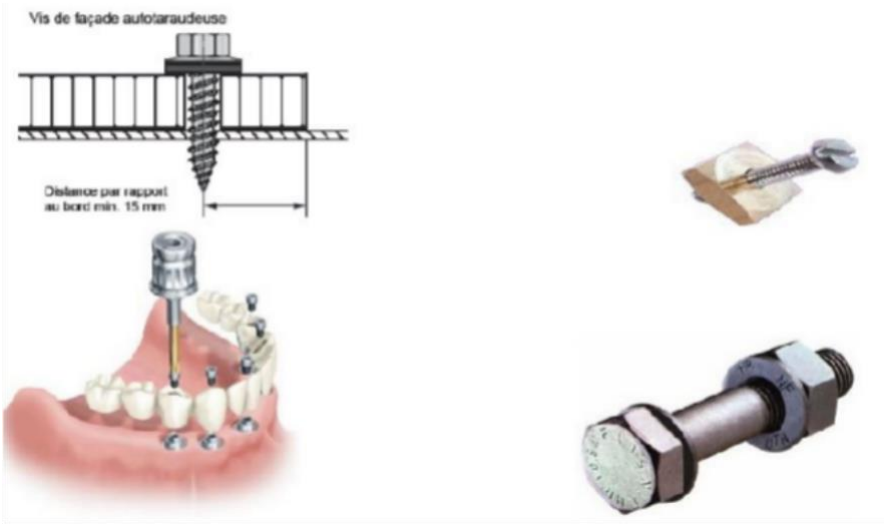

Fig.10. Screws and bolts

A nut is a fundamental component within a screw-and-nut system, utilized either for part assembly or motion transformation.

The functional analysis of a nut involves the examination of three key elements:

- Its bearing surface
- Its drive system
- Its tapped hole

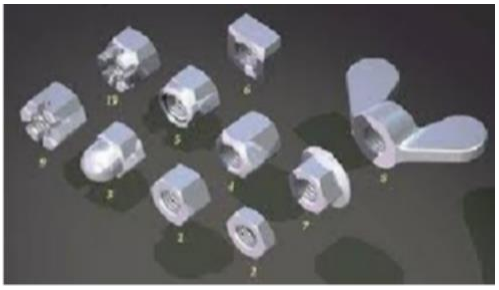

Fig.11. Nuts

4.7 Studs

In certain applications, the use of a conventional bolt is impractical due to the excessive shank length that would be required or the lack of space to accommodate the bolt head.

This challenge is resolved by utilizing one of the components to function as the bolt head. This is achieved by permanently mounting the threaded shank, or "stud," onto this component.

A stud is a mechanical fastener in the form of a rod, partially or fully threaded, which creates a "complete, rigid, yet demountable" connection. It is fixed into a primary component, and one or more secondary components are then secured by being slid over the stud and fastened with a nut.



Fig.12. Goujons

4.8 Keying

A key is a component designed to synchronize the rotation of two parts, such as a shaft and a hub. While forced (interference) key fits can be classified as form-locked connections, the stability of the key itself is achieved through a wedging action, which introduces a significant frictional (adhesive) component.

Keying is categorized as either *transverse* or *longitudinal*, depending on the key's orientation relative to the axis of rotation.

It is important to note that while the resulting connection is "complete" in terms of constraining relative motion, it is not suited for transmitting high loads in all directions. Its primary function is the reliable transmission of torque.

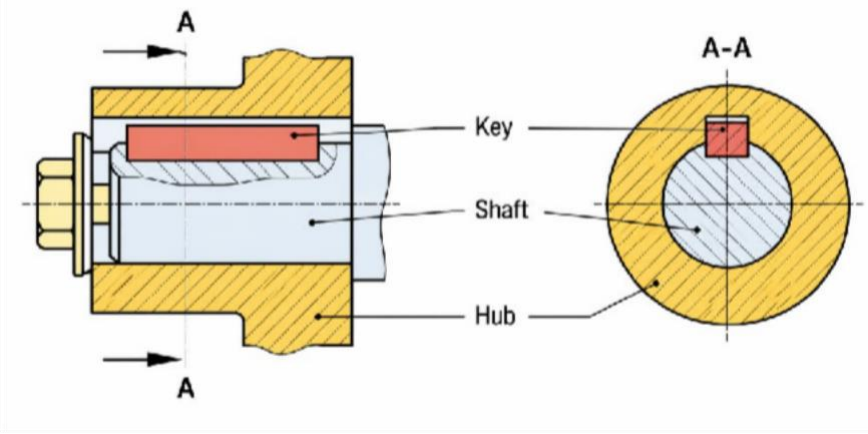

Fig.13. Keying

4.9 Mechanical Clinching

Mechanical clinching is a technique for joining sheet metal components (3, 4). The fundamental principle involves connecting the sheets through a cold-forming process between a punch (1), actuated by a press (2), and a die (5), with the finished assembly subsequently ejected by a stripper (6).

The process induces a localized plastic deformation in the sheets, creating an interlocking point or button joint. In essence, cold-forming is utilized as the joining mechanism.

Clinching offers significant advantages:

- It requires no consumable materials, unlike welding or brazing.
- It enables the joining of sheets with different thicknesses.
- It permits the assembly of dissimilar materials (e.g., aluminum and steel).
- It is compatible with pre-painted or corrosion-protected sheets, as it does not damage the coating at the joint interface.
- A notable limitation, however, is that the resulting joint is generally not fluid-tight.

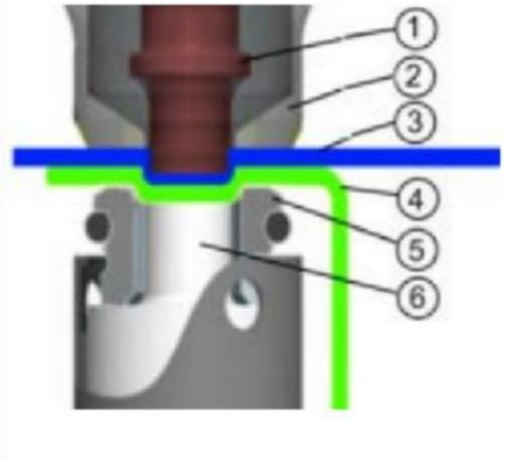

Fig.14. the Clinching

4.10 Shrink Fitting

Shrink fitting is a permanent assembly method that relies on an interference fit between two components. The outer part is termed the "shrink ring" or "collar," while the inner part is referred to as the "shrink-fitted" component.

The assembly is machined to tolerances that preclude manual or even press-fit assembly. The most common technique, where material properties allow, involves thermally expanding the outer ring by heating it before sliding it over the inner element. Upon cooling, the ring contracts, creating a high-pressure, rigid joint. Alternatively, the inner component can be cryogenically contracted using agents like liquid nitrogen or dry ice, though this method is typically more costly. For demanding applications, such as sintering or forging dies, a combination of both heating the outer ring and cooling the inner component may be necessary.

Primary Applications: Shrink fitting is predominantly used to reinforce the structural integrity of multi-part assemblies or to prevent the bursting of a component under internal pressure.

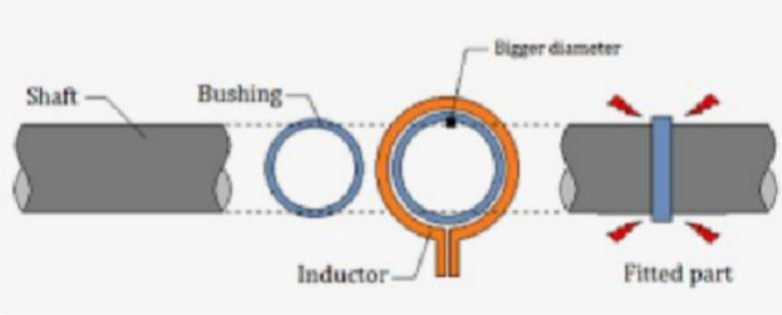

Fig.15. shrink-fitted

4.11 Snap-Fit Assembly

A snap-fit is an assembly method where the components are temporarily elastically deformed during engagement. Once fully mated, the parts recover their original shape, creating a secure, often permanent, mechanical lock without residual stress. The accompanying cross-sectional view illustrates this principle: the blue component (male part) is clearly constrained from movement without inducing elastic deformation in the green component (female part).

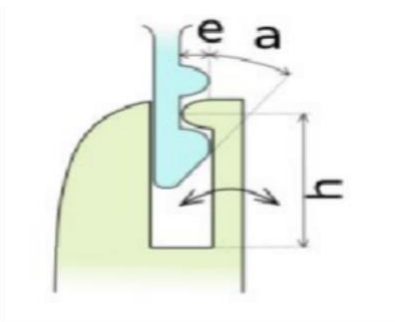

Fig.15. Elastic joint

e: the thickness of the lip or upper part of the profile.

h: the total height of the profile (vertical dimension).

a: the width or depth of engagement of the upper part (horizontal dimension).

4.12 Mortise and Tenon Joint

A mortise and tenon is a classic joining technique for two components, commonly used in woodworking or sheet metal fabrication. The joint consists of a protruding tenon on one piece, designed to fit precisely into a corresponding cavity, the mortise, on the other.

In traditional woodworking and timber framing, the tenon's width is typically one-third the total width of the piece from which it is formed.

In sheet metal work, this technique involves stamping a form into a sheet to create a recess or housing, allowing a second component to be mounted flush without protruding.

4.13 Crimping

Crimping is a joining technique commonly employed for assembling thin sheet metal components. The method involves folding and compressing the edges of the sheets together to form a secure, mechanical lock.

A widely recognized example of crimping is the seam joining the body and the base of a tin can.

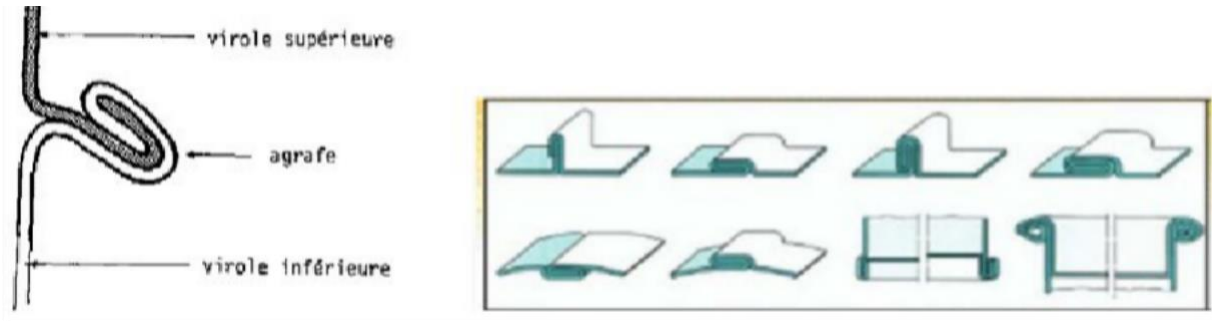

Fig.16. The crimping

5. Polymer extrusion

Polymer extrusion is a continuous industrial manufacturing process that transforms plastics (in the form of pellets or powder) into long, uniform profiles (tubes, window profiles, films, cable sheaths). **[10]**

1. General principle

The process is based on a thermomechanical action: the plastic is heated until it becomes malleable or melted, then forced under high pressure through a precise mould.

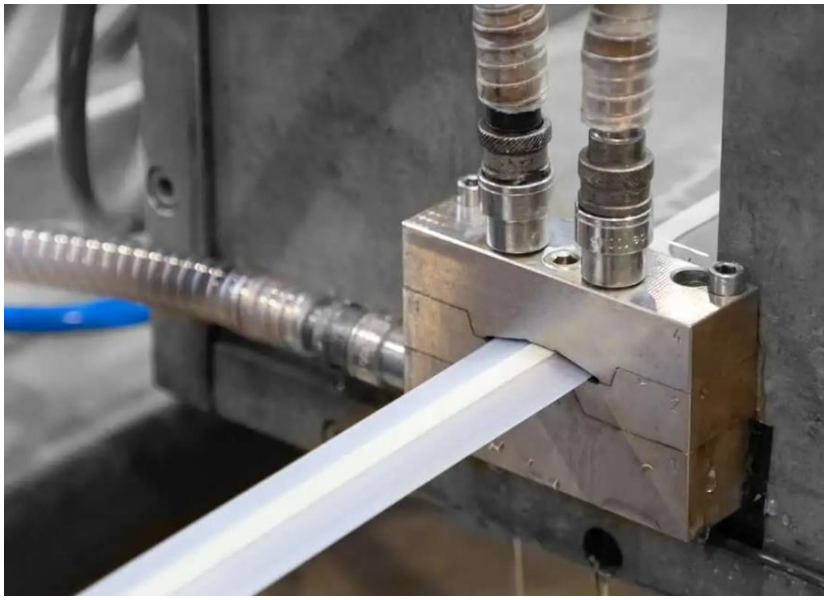

Fig.17. Polymer extrusion

2. The main stages of the process

- **Feeding:** Polymer pellets or powder are poured into a hopper, which feeds the machine by gravity. [10,11]
- **Plasticisation and transport:** The material falls into a heated cylinder (the barrel) through which a rotating screw (or Archimedes' screw) passes. As it moves through, the polymer is compressed, mixed and heated simultaneously by the mechanical shearing action of the screw and by external heating collars until it melts. [10,11]
- **Extrusion (passing through the die):** The molten, homogenised material is forced through the die, which gives it the desired geometric shape. [10,11]
- **Cooling and sizing:** On emerging from the die, the profile often passes through a conformer and a water-cooled (or air-cooled) tank to set its shape permanently. [10,11]
- **Drawing and cutting:** A steady drawing system continuously pulls the profile along before it is cut to the desired length or coiled. [10,11]

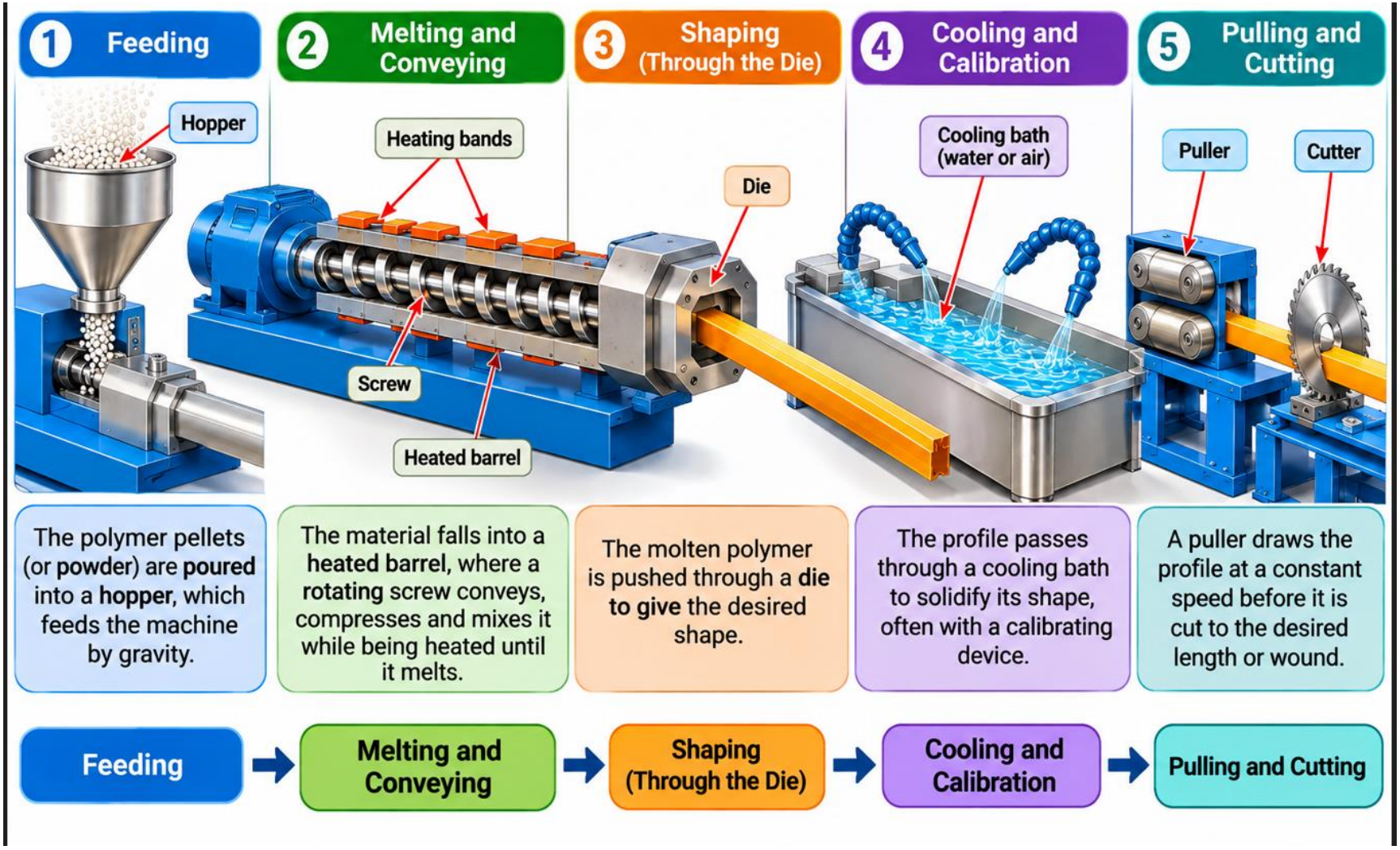

Fig.18. The main stages of the process

References

[1] E. Lecoeur, (1973). Mechanical Manufacturing Technology - Booklet 2: Work of the Mechanical Fitter, Delagrave, Paris.

[2] J. Carvill, (1994). Mechanical Engineer's Data Handbook. Butterworth-Heinemann.

[3] André Dupont & Abdon Castell, (1960). General Professional Technology, Mechanical Professions: 1st Year and Industrial Technology, Part 3: Work Carried Out on Machine Tools, Desforges, Paris.

[4] P. Padilla and A. Thély, (1986). Guide to Mechanical Manufacturing. Dunod, Paris.

[5] D. Landre, Y. Anfreville, (1980). Introduction to Mechanical Manufacturing Processes, Foucher, Paris.

[6] Basic Technology Course, 2nd Year TCST, (1998). Dr. Brahim Nine, University of Biskra.

[7] André Ricardeau & Claude Corbet, (1990). Construction technology dossier, Editions Casteilla. Paris.

[8] https://elearn.univ-biskra.dz/mod/resource/view.php?id=820

[9] https://elearn.univ-biskra.dz/file.php/74/metaux_et_alliages_non_ferreux.pdf

[10] https://stacindustry.com/fr/processus/principaux/extrusion-de-polymeres/

[11] https://fr.scribd.com/document/544604922/TP-technique-d-extrusion-des-polymeres